**DATA SPEED S.R.L.**
Str. Corneliu Coposu nr. 103, Cluj-Napoca, cod 400235, jud. Cluj
Tel: 0264 566 473, 0735 803 121
office@dataspeed.ro · www.dataspeed.ro

# CONJ-BASES-SP

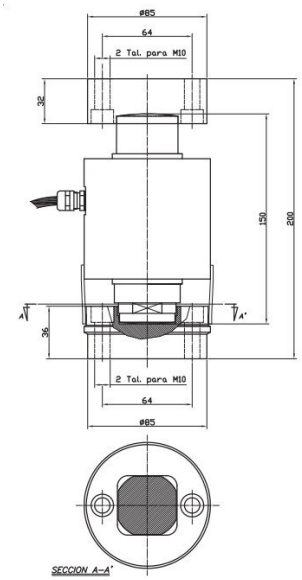


CONJ-BASES-SP. Producator: Sensocar.