# Type 1X Miniature Sensor



## Short description

- Aluminium bending miniature sensor
- High accuracy
- Used for small scales

## Available models

| Capacity | Accuracy | Full article description |
|---|---|---|
| 300g | 0.03% | 1X-52*10*10-300g |
| 500g | 0.03% | 1X-52*10*10-500g |
| 600g | 0.03% | 1X-52*10*10-600g |

Specifications and dimensions are subject to change without notice and do not constitute any liability whatsoever.

Zemic Europe B.V.
Leerlooierstraat 8
4871 EN Etten-Leur
The Netherlands

T: +31 76 50 39480
F: +31 76 50 39481
info@zemic.nl
www.zemic.nl

# Type 1X Miniature Sensor

## Detailed specifications 1X

| | | |
|---|---|---|
| Accuracy class | of FS | 0.03% |
| Output sensitivity ( = FS ) | mV/V | 1.0±0.1 |
| Maximum capacity ( $E_{max}$ ) | g | 300, 500, 600 |
| Temperature effect on zero | %FS/10°C | ±1.0 |
| Temperature effect on Sensitivity | %FS/10°C | ±0.05 |
| Minimum dead load | of $E_{max}$ | 0% |
| Safe overload | of $E_{max}$ | 150 % |
| Ultimate overload | of $E_{max}$ | 300% |
| Zero output | mV/V | ≤ ± 0.1 |
| Excitation, recommended voltage | V | 5 ~ 9 |
| Excitation maximum | V | 10 |
| Input resistance | Ω | 1055 ± 10 |
| Output resistance | Ω | 1000 ± 10 |
| Insulation resistance | MΩ | ≥2000 ( at 50VDC ) |
| Compensated temperature | °C | -10 ~+40 |
| Operating temperature | °C | -10 ~ +40 |
| Storage temperature | °C | -20 ~ +65 |
| Element material | | Aluminium |
| Creep | %FS/3 min | ±0.03 |
| Non-linearity | %FS | ±0.02 |
| Repeatability | %FS | ±0.02 |
| Hysteresis | %FS | ±0.02 |

## Wiring

**Wiring:**
4 separate conductor cables.
Standard cables length: 0.25m.

**4-wire diagram**

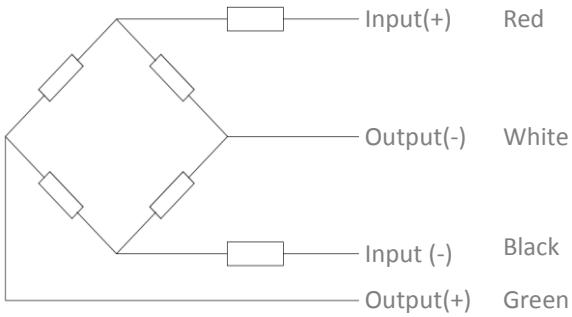


Specifications and dimensions are subject to change without notice and do not constitute any liability whatsoever.

Zemic Europe B.V.
Leerlooierstraat 8
4871 EN Etten-Leur
The Netherlands

T: +31 76 50 39480
F: +31 76 50 39481
info@zemic.nl
www.zemic.nl

## Dimensions in mm

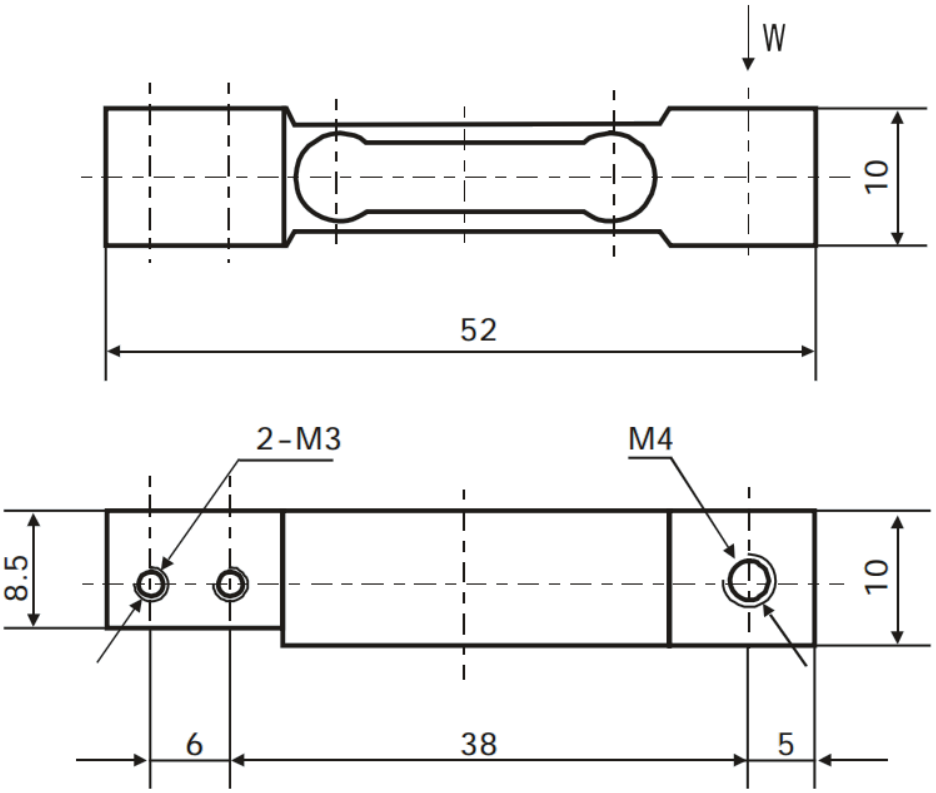


Specifications and dimensions are subject to change without notice and do not constitute any liability whatsoever.

Zemic Europe B.V.
Leerlooierstraat 8
4871 EN Etten-Leur
The Netherlands

T: +31 76 50 39480
F: +31 76 50 39481
info@zemic.nl
www.zemic.nl