Type 2D Load Cell

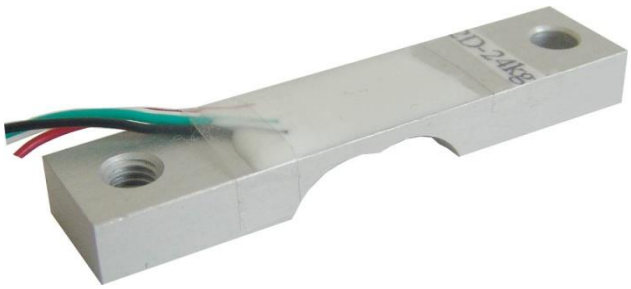

Short description

- Aluminium bending miniature sensor
- High accuracy
- Used for personal scales

Available models

Capacity	Accuracy	Full article description
24kg	0.05%	2D-24kg

Specifications and dimensions are subject to change without notice and do not constitute any liability whatsoever.

Zemic Europe B.V.
Leerlooierstraat 8
4871 EN Etten-Leur
The Netherlands

T: +31 76 50 39480
F: +31 76 50 39481
info@zemic.nl
www.zemic.nl

Type 2D Load Cell

Detailed specifications 2D

Accuracy class	of FS	0.05%
Output sensitivity (= FS)	mV/V	2.8±0.2
Maximum capacity (E_{max})	kg	24
Temperature effect on zero	%FS/10°C	±0.2
Temperature effect on Sensitivity	%FS/10°C	≤+0.3
Minimum dead load	of E_{max}	0%
Safe overload	of E_{max}	150 %
Ultimate overload	of E_{max}	300%
Zero output	mV/V	± 0.5
Excitation, recommended voltage	V	2 ~ 5
Excitation maximum	V	6
Input resistance	Ω	1100 ± 100
Output resistance	Ω	1100 ± 100
Insulation resistance	MΩ	≥2000 (at 50VDC)
Compensated temperature	°C	-10 ~+40
Operating temperature	°C	-10 ~ +40
Storage temperature	°C	-20 ~ +65
Element material		Aluminium
Creep	%FS/3 min	±0.05
Non-linearity	%FS	±0.05
Repeatability	%FS	±0.05
Hysteresis	%FS	±0.05

Wiring

Wiring:
4 separate conductor cables.
Standard cables length: 0.25m.

4-wire diagram

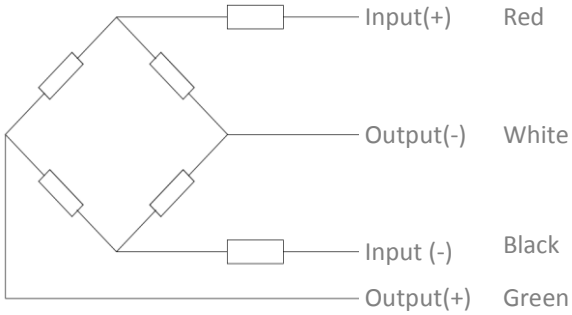

Specifications and dimensions are subject to change without notice and do not constitute any liability whatsoever.

Zemic Europe B.V.
Leerlooierstraat 8
4871 EN Etten-Leur
The Netherlands

T: +31 76 50 39480
F: +31 76 50 39481
info@zemic.nl
www.zemic.nl

Type 2D Load Cell

Dimensions in mm

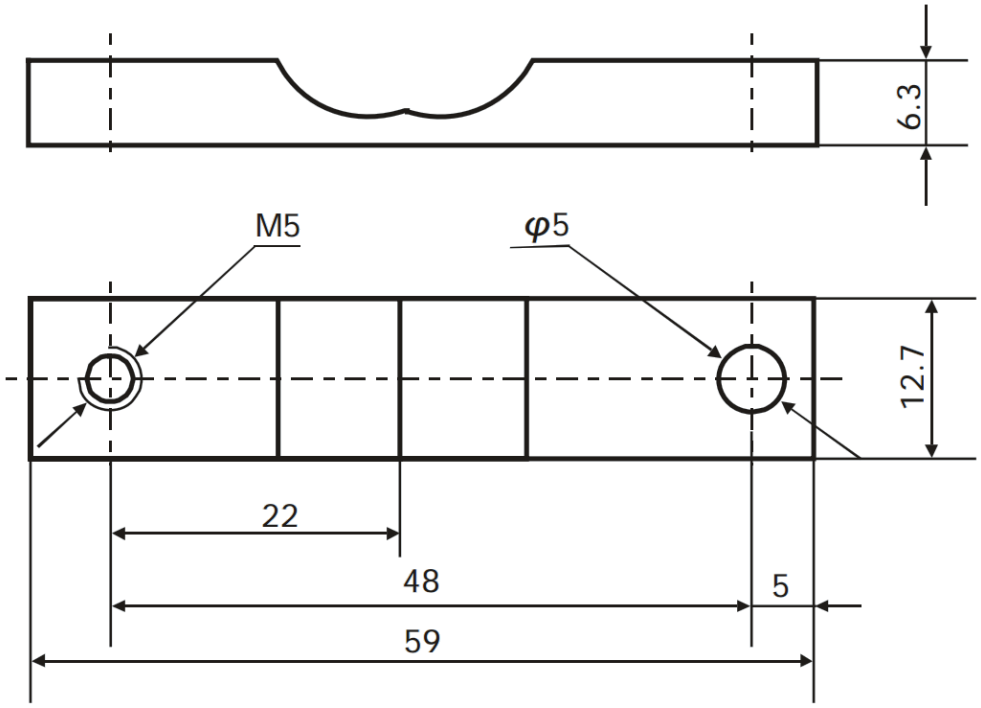

Specifications and dimensions are subject to change without notice and do not constitute any liability whatsoever.

Zemic Europe B.V.
Leerlooierstraat 8
4871 EN Etten-Leur
The Netherlands

T: +31 76 50 39480
F: +31 76 50 39481
info@zemic.nl
www.zemic.nl