Type 52-00 Base Plate

Product Description

Flintec load cell supports are designed to prevent unwanted forces from affecting load cell performance.

The type 52-00 is a base plate assembly, used to support the SB4, SB5, SB6, SB8, SLB, SB9 and SB14 load cells. The assembly includes base plate and load cell mounting bolts.

For SLB, SB9 and SB14 load cells the base plate is supplied with a lateral load cell locking system for reacting side loads. Optionally available for SB4 and SB5 load cells.

It can also be provided with an overload stop, to protect the load cell.

Material: steel, zinc plated; alternatively stainless steel.

Key Features

- Capacity range: 10 kg to 10 000 kg
- Very easy to install

Options

- Lateral load cell locking system for SB4 and SB5.
- Overload protection system

Dimensions (in mm)

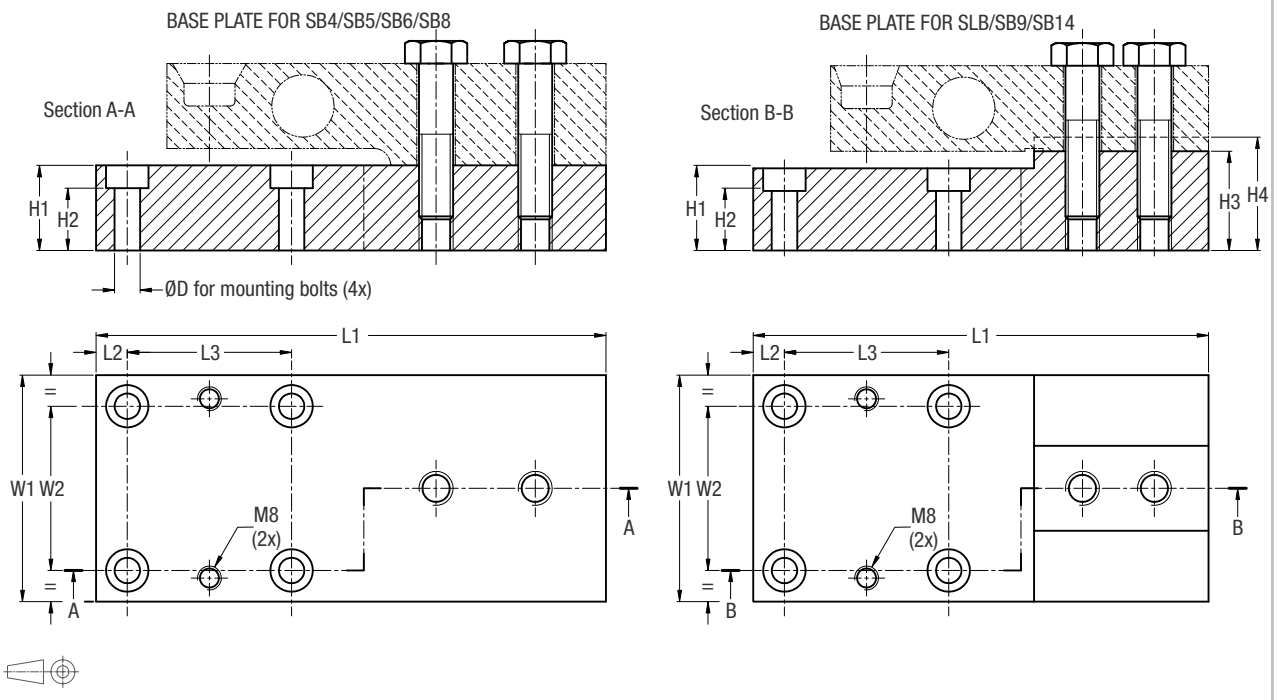

Load Cell Type	Capacity in kg	L1	L2	L3	H1	H2	H3	H4	W1	W2	D	Mounting bolts
SB6-20 kg...2 kN *	20...204	150	8	44	15	8	n.a.	n.a.	60	44	7	M6
SB8-10 kg...500 kg *	10...500											
SB4-5 kN...20 kN	510...2039	180	11	58	30	21			80	58	9	M8
SB5-5 kN...20 kN												
SB4-50 kN	5099	220	12	76	40	29			100	76	11	M10
SB5-50 kN												
SB4-100 kN	10197	275	15	90	60	47			120	90	14.5	M12
SB5-100 kN												
SLB-200 lb...5 klb	91...2268	164	11	58	29	20	35	40	80	58	9	M8
SB9-250 kg...2000 kg	250...2000											
SB14-500 lb...5 klb	227...2268											
SB14-10 klb	4536	210	12	76	38	32	46	50	100	76	18	M10

* To be mounted including spacer (height 15 mm).

Options

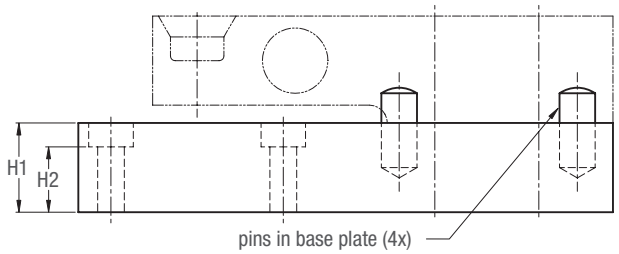

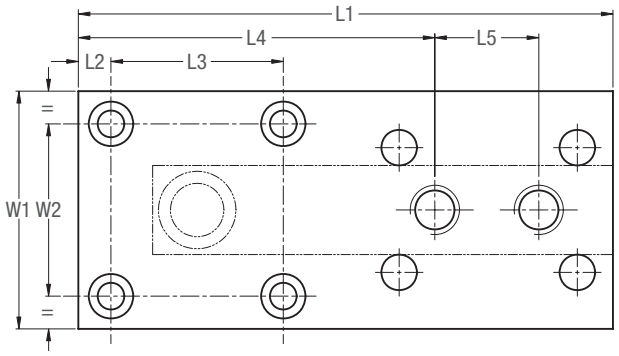

Load cell locking system for SB4/SB5 (option)
(Pins in base plate prevents rotation of the load cell)

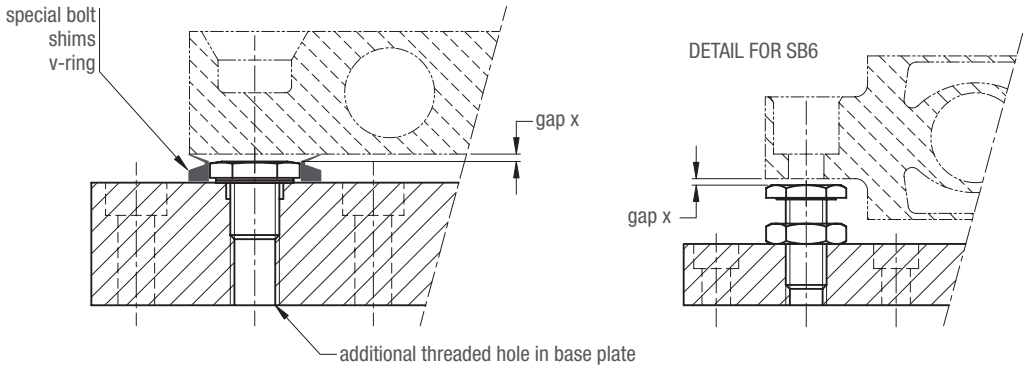

Overload protection system (option)
(Gap x setting by means of special shims)

Load cell deflection

Load cell SB6	Deflection *	Gap "x" setting**	Load cell SB4/SB5	Deflection *	Gap "x" setting**	Load cell SLB	Deflection *	Gap "x" setting**	Load cell SB14	Deflection *	Gap "x" setting**
200 N	0.21 mm	0.25 mm	5 kN	0.21 mm	0.25 mm	200 lb	0.27 mm	0.35 mm	500 lb	0.21 mm	0.30 mm
500 N	0.30 mm	0.40 mm	10 kN	0.29 mm	0.35 mm	500 lb	0.24 mm	0.30 mm	1 klb	0.24 mm	0.30 mm
1 kN	0.26 mm	0.35 mm	20 kN	0.49 mm	0.60 mm	1 klb	0.25 mm	0.30 mm	2.5 klb	0.32 mm	0.40 mm
2 kN	0.36 mm	0.45 mm	50 kN	0.52 mm	0.65 mm	2.5 klb	0.33 mm	0.40 mm	5 klb	0.47 mm	0.60 mm
			100 kN	0.74 mm	0.95 mm	5 klb	0.56 mm	0.70 mm	10 klb	0.30 mm	0.40 mm

Load cell SB8	Deflection *	Gap "x" setting**
10 kg	0.29 mm	0.35 mm
20 kg	0.30 mm	0.40 mm
50 kg	0.23 mm	0.30 mm
100 kg	0.30 mm	0.40 mm
200 kg	0.38 mm	0.45 mm
250 kg	0.87 mm	0.95 mm
500 kg	1.25 mm	1.35 mm

Remarks:
* Deflection is defined as the sum of load cell deflection and base plate bending.
** Settings for utilisation to Maximum Capacity of the load cell.
If utilisation of load cell is lower, the setting value could be reduced in proportion to the load.