# Type 52-01HD Weigh Module

**20 t / 45 t**

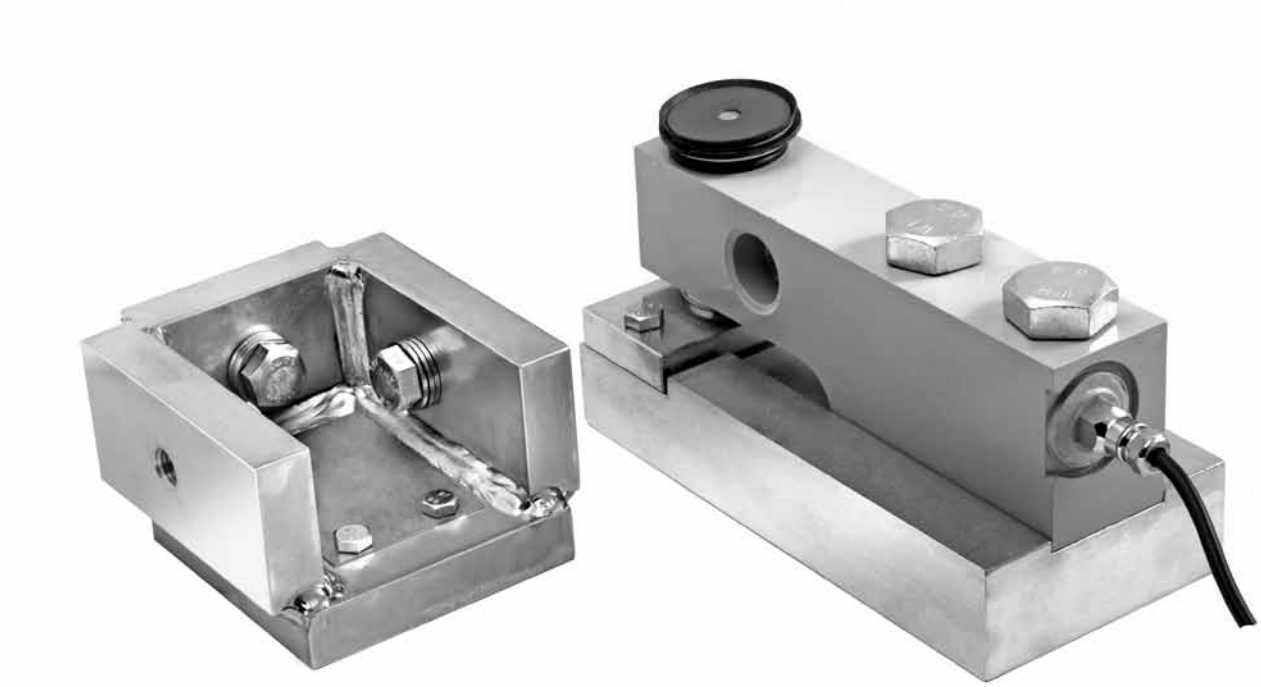

Weigh-Module Type 52-01HD with SB2 load cell

## Product Description

Flintec load cell supports are designed to prevent unwanted forces from affecting load cell performance.

The type 52-01HD weigh module with type SB2 load cell is designed for high capacity, heavy duty, platform scales. It is especially well suited for scales in the steel industry. For example ladle and scrap basket scales where the load is handled with crane on and off the scale and frequent overloading occurs.

For scrap basket scales the built in overload stop efficiently protects the load cell from impact loads when scrap is loaded and being dropped from sometimes several meters height into the basket.

Available as 3-directional bumper module resp. free sliding module.

The bumpers of the 3-directional module can be rearranged to achieve a number of different bumping configurations. See examples on page 2(2).

A machined slot in the base plate prevents the load cell from sliding when subjected to high side forces.

An overload stop can be added as an option and protects the load cell from overloads up to approx. 500% of rated load.

Material: Mild steel, painted.

## Key Features

- Capacities: 20 t and 45 t
- Ideal for high capacity, heavy duty, platform scales
- Blind hole load introduction
- W&M certified
- Extremely rugged design
- Easy installation by welding

## Option

- Overload stop

## Dimensions (in mm)

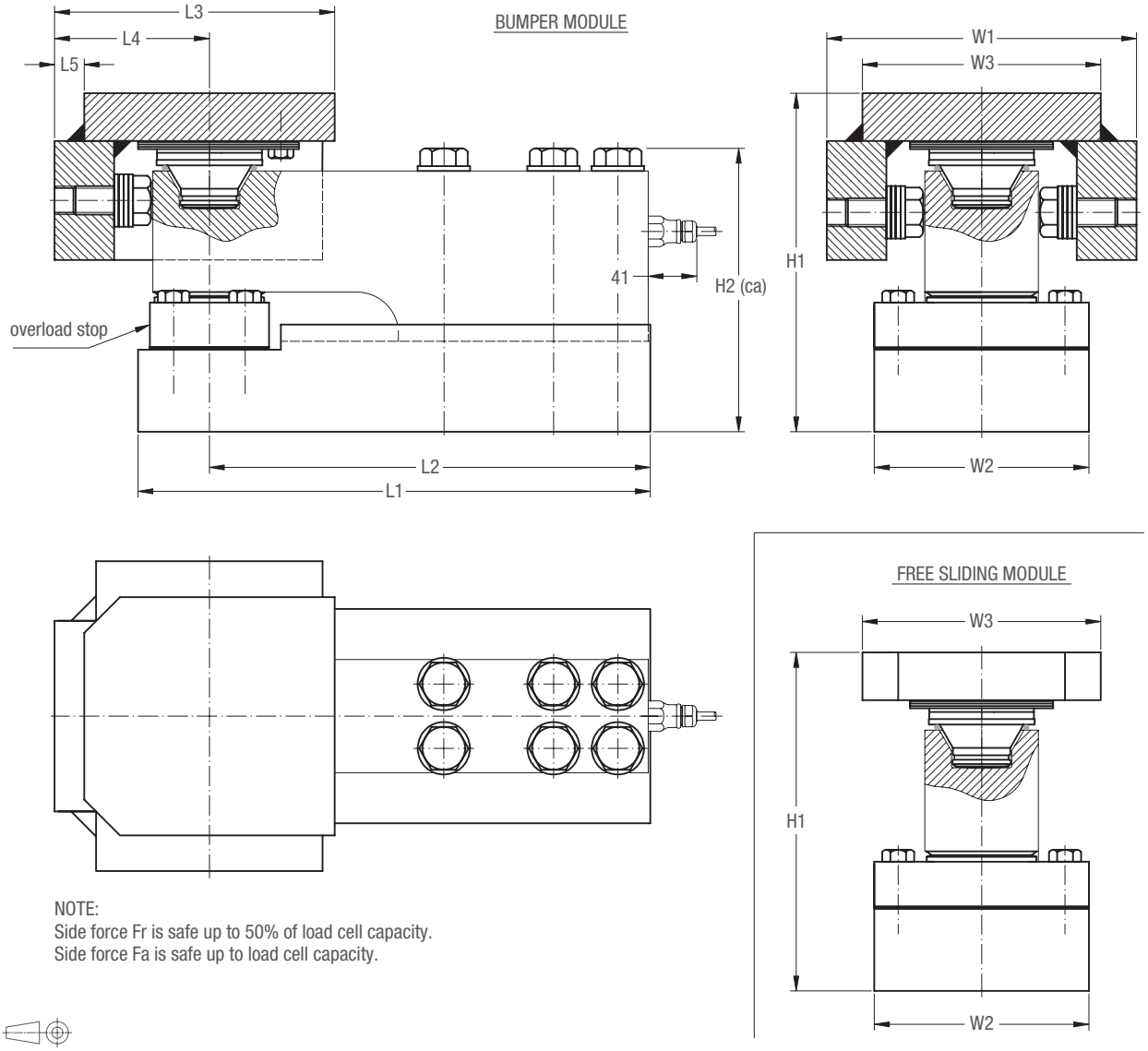


NOTE:
Side force Fr is safe up to 50% of load cell capacity.
Side force Fa is safe up to load cell capacity.

| Load cell type | L1 | L2 | L3 | L4 | L5 | W1 | W2 | W3 | H1 | H2 | Weight incl. load cell (kg) |
|---|---|---|---|---|---|---|---|---|---|---|---|
| SB2-45 klb | 320 | 281 | 195 | 91 | 15 | 176 | 150 | 150 | 200 | 171 | 54 |
| SB2-100 klb | 430 | 370 | 235 | 130 | 25 | 260 | 180 | 200 | 284 | 238 | 128 |

CAD files for customer's own application drawings are available on request.
Remark: Load cell mounting for SB2-45 klb according data sheet SB2.

## Orientation of weigh modules

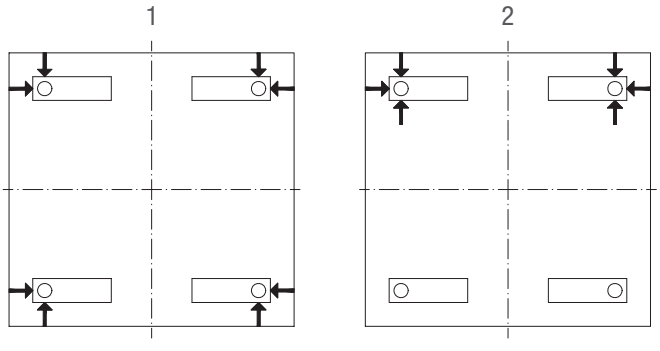


ACHIEVABLE BUMPER ARRANGEMENTS

drawing symbols

