Type 52-15 Height Adjustable Rubber Foot

200 kg … 2 t



Height adjustable rubber foot 52-15 and BK2 load cell

10 kg … 500 kg

Height adjustable rubber foot 52-15 and SB8 load cell

Product Description

Flintec load cell supports are designed to prevent unwanted forces from affecting load cell performance.

The Type 52-15 is an height adjustable, self aligning rubber foot; combining excellent load introduction with low profile design.

Especially designed for the BK2 (BK2-xxx kg-TM and BK2-xxx kg-TU) and type SB8 load cells.

Available in 3 versions:

- Metric version for BK2: Height adjustable by rotation of the foot
- Unified version for BK2: Height adjustable by rotation of pin from top
- Version for SB8: Threaded loading pin is secured by nuts

Material: stainless steel.

Key Features

- Capacity range: 200 kg to 2 000 kg for BK2 and 10 kg to 500 kg for SB8
- Low profile
- Available in 3 versions
- Very easy to install
- Especially designed for platform scales
- W&M certified

Available Accessory

- Fixation plate

Examples

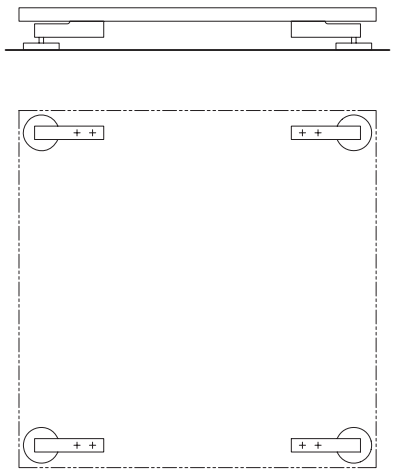

Platform scale with 4 load cells

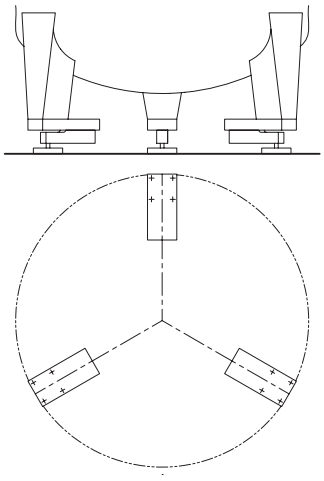

Tank weighing system with 3 load cells
(recommended base plate 52-00 included)

Metric version for BK2 (dimensions in mm)

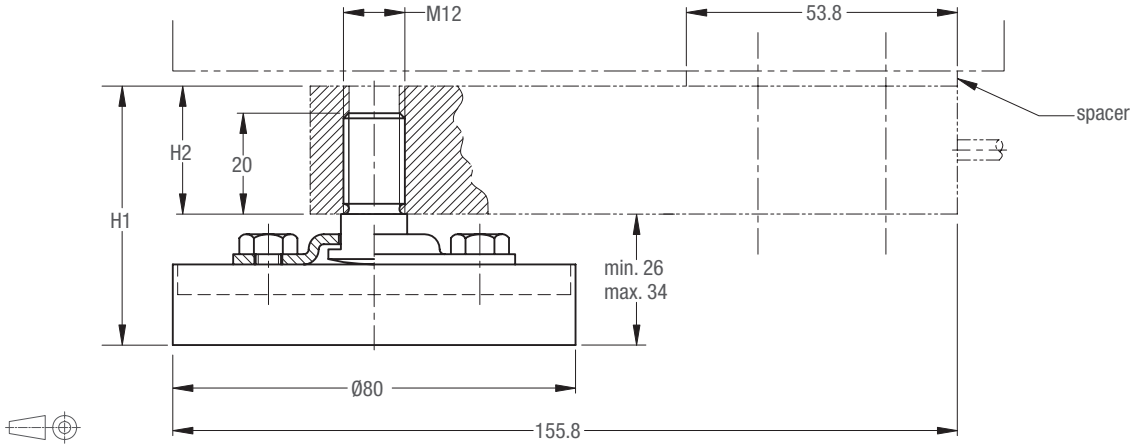

Load Cell	Total height H1	Load Cell height H2	*Extension above load cell
BK2-200 kg	38.7...46.7	12.7	0...7.3
BK2-500 kg	41.9...49.9	15.9	0...4.1
BK2-1 000 kg	45.1...53.1	19.1	0...0.9
BK2-2 000 kg	51.4...59.4	25.4	n.a.

***Remark:**
The height of the BK2 load cell (H2) depends on its maximum capacity.
The loading pin has a thread length of 20 mm.
At the minimum total height (H1) the loading pin extends significantly above the load cell for the maximum capacities 200 and 500 kg.
This value is calculated in the column “Extension above load cell“
The height of the spacer should be adapted accordingly.

Height adjustable by rotation of the foot (BK2-xxx kg-TM).

Unified version for BK2 (dimensions in mm)

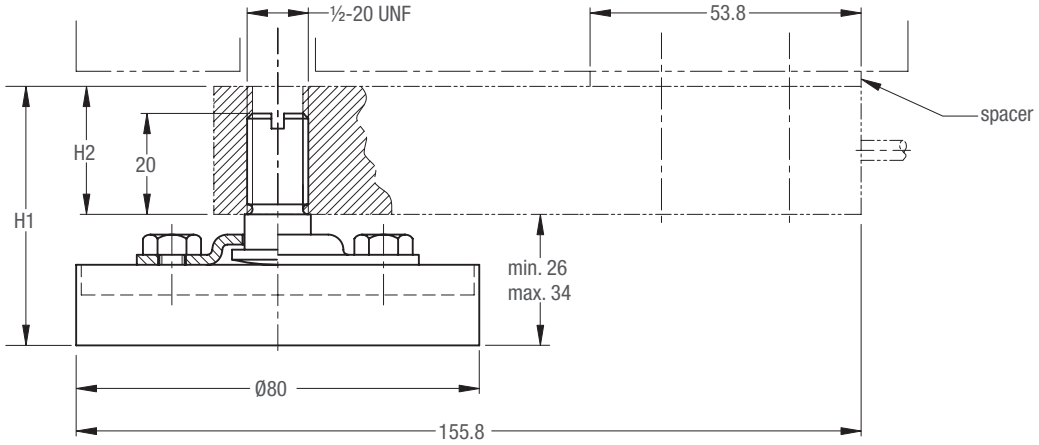

Height adjustable by rotation of pin from top (BK2-xxx kg-TU).

Version for SB8 (dimensions in mm)

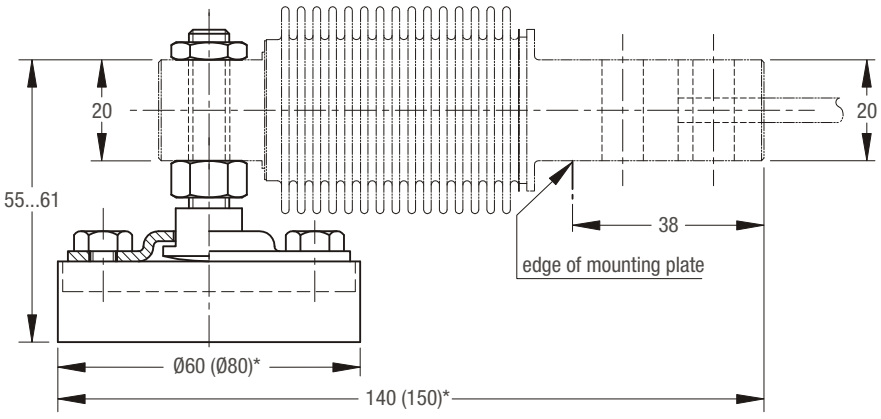

* Valid for SB8-500 kg.