Type 55-01-07A Rocker System

25 t ... 90 t



Rocker System 55-01-07A with RC1 Load Cell

Product Description

Flintec load cell supports are designed to prevent unwanted forces from affecting load cell performance.

The type 55-01-07A is a self aligning rocker system, combining excellent load introduction with low profile design.

Especially designed for the RC1 load cells.

Material: steel, zinc plated.

A mounting fixture is available for easy and accurate positioning of foundation plates.

Key Features

- Capacities 25 t, 40 t, 60 t and 90 t
- Low cost
- Very easy to install
- Especially designed for weighbridges
- W&M certified

Available Accessories

- Mounting fixture
- Welding plate

Dimensions (in mm)

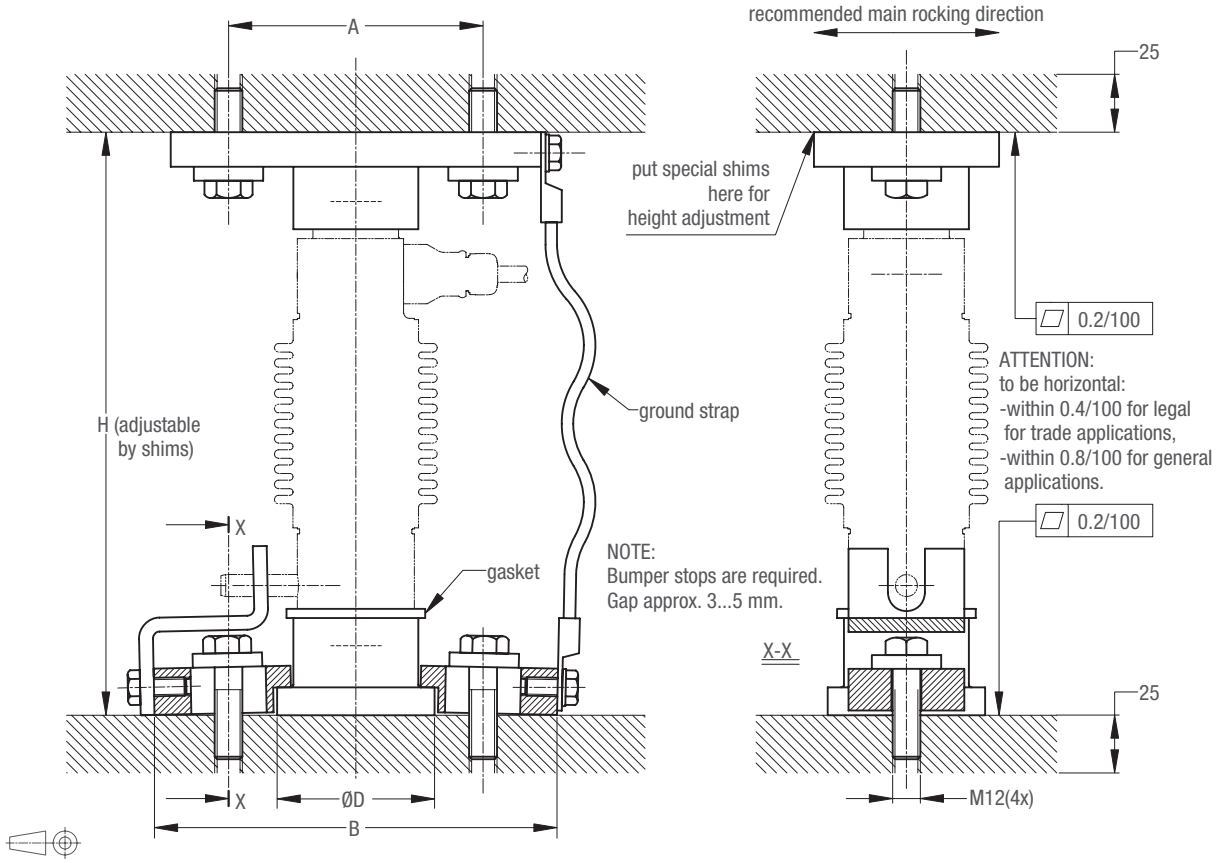

Load cell type	A	B	D	H
RC1-250 kN	110	176	68	252
RC1-400 kN				285
RC1-600 kN	130	196	88	300
RC1-900 kN				

CAD files for customer's own application drawings are available for download from the Flintec homepage.

Accessories

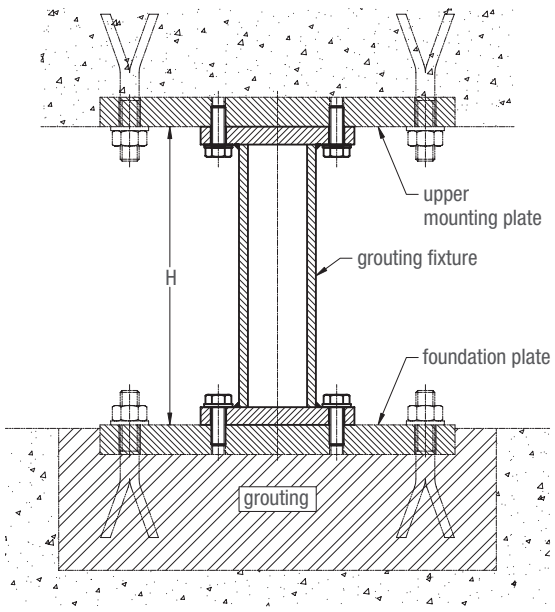

The mounting fixture is used for easy and accurate positioning of the foundation plate.