Type 55-30 Weigh Module

30 t … 40 t



Weigh Module 55-30 with RC3 Load Cell

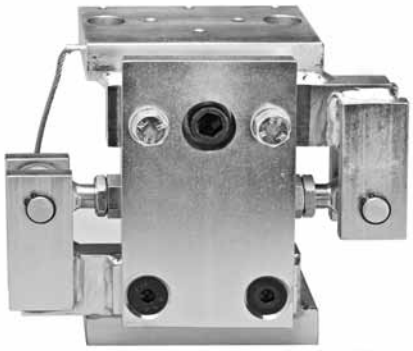

Pre-assembled module

Product Description

Flintec load cell supports are designed to prevent unwanted forces from affecting load cell performance.

The type 55-30 is a self aligning weigh module, with excellent load introduction.

The module is especially designed for using Flintec rocker column load cells in hopper and tank weighing applications and incorporates an integrated check link to eliminate oscillations caused by slow moving agitators etc.

The Weigh Module will be shipped completely pre-assembled including a transportation lock; ready for installation by welding or bolting.

Material: steel, zinc plated; alternatively stainless steel

Key Features

- Capacities 30 t and 40 t
- Very easy to install
- Very rugged
- Especially designed for hopper and tank weighing with slow moving agitators
- With integrated lift off protection
- Load cell replacement requires minimum lifting height

Dimensions (in mm)

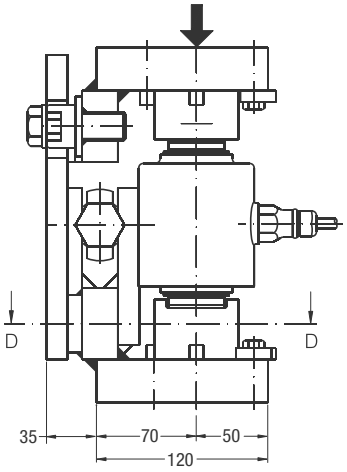

A-A

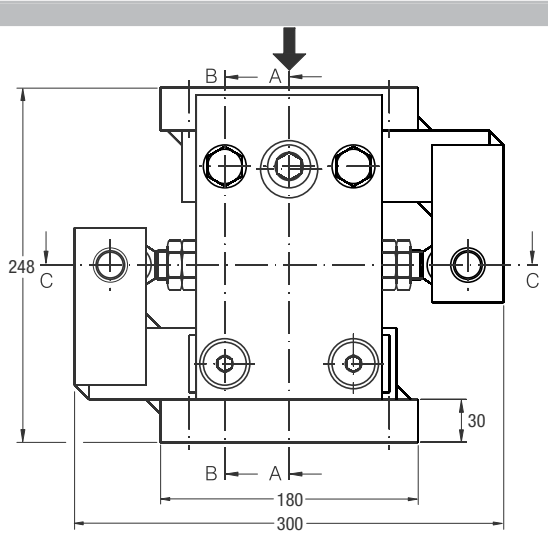

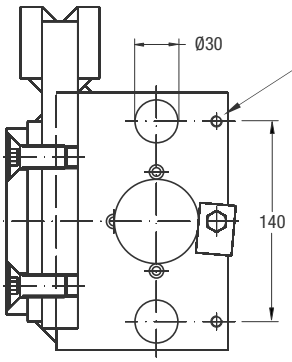

D-D

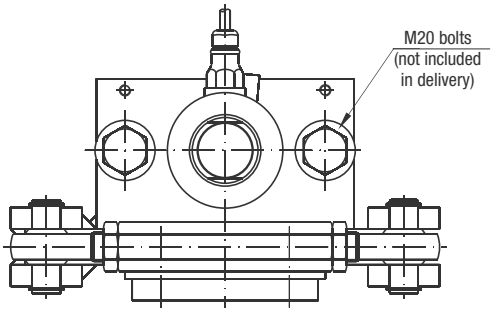

C-C

REMARK:
Welding instead of bolting is a very practical alternative eliminating problems of getting holes on top and bottom lined up.

NOTES:
- Tank foot and foundation plate to be horizontal:
  -within 0.4/100 for legal for trade applications,
  -within 0.8/100 for general applications.
- Maximum force on check link: 50 kN.
- Maximum force on lift off protection: 100 kN.
- Total weight: 25 kg.

CAD files for customer's own application drawings are available for download from the Flintec homepage.

Check link orientation

3 Load cells

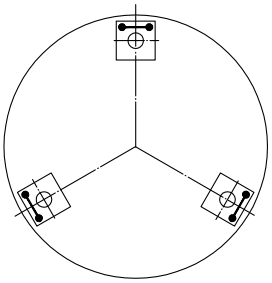

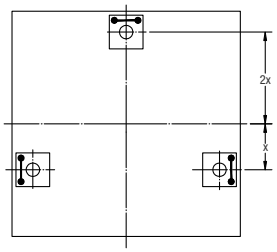

4 Load cells

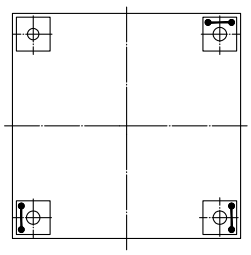

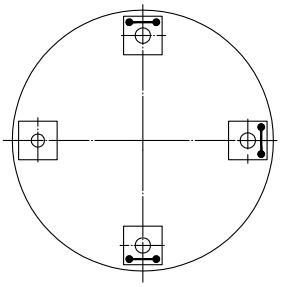

drawing symbols

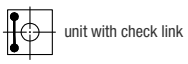

Module assembled for shipment and installation

