Type BM14K Load Cell



Short description

- Stainless steel IP68 compression load cell
- Hermetically sealed
- Suitable for hopper scales and vehicle testing facilities
- Built in surge arrestors

test certificate no. D09-07.02 Revision 1
C of C no R60/2000-NL1-10.10

Certificate no. 10-087

Available models

Capacity	Accuracy	Full article description
10t	C3	BM14K-C3-10t-12B6-W1
15t	C3	BM14K-C3-15t-12B6-W1
20t	C3	BM14K-C3-20t-12B6-W1
30t	C3	BM14K-C3-30t-18B6-W1
40t	C3	BM14K-C3-40t-20B6-W1
50t	C3	BM14K-C3-50t-20B6-W1
60t	C3	BM14K-C3-60t-20B6-W1
100t	C3	BM14K-C3-100t-20B6-W1

Specifications and dimensions are subject to change without notice and do not constitute any liability whatsoever.

Zemic Europe B.V.
Leerlooierstraat 8
4871 EN Etten-Leur
The Netherlands

T: +31 76 50 39480
F: +31 76 50 39481
info@zemic.nl
www.zemic.nl

Type BM14K Load Cell

Detailed specifications BM14K

Accuracy class		OIML R60 C3		
Output sensitivity (= FS)	mV/V	2.0 ± 0.002		
Maximum capacity (E_{max})	t	10, 15, 20, 30, 40, 50	60, 100	
Max.number of load cell intervals	n_{LC}	3000		
Ratio of min. LC verification interval	$Y = E_{max} / v_{min}$	7000	9000	
Combined Error	%FS	≤± 0.020		
Minimum dead load	Of E_{max}	0%		
Safe overload	of E_{max}	150 %		
Ultimate overload	of E_{max}	300 %		
Zero balance	of FS	< ± 1.0 %		
Excitation, recommended voltage	V	5 ~ 12		
Excitation maximum	V	18		
Input resistance	Ω	700 ± 7		
Output resistance	Ω	703 ± 4		
Insulation resistance	MΩ	≥5000 (at 50VDC)		
Compensated temperature	°C	-10 ~+40		
Operating temperature	°C	-35 ~ +65		
Storage temperature	°C	-40 ~ +70		
Element material		Stainless steel		
Ingress Protection (acc. to EN 60529)		IP68		
Recommended torque on fixation	Nm	-		
ATEX classification (optional)		II1G Ex ia II1C T4	II1D Ex iaD 20 T73°C	II3G nL IIC T4

Wiring

Wiring:
shielded, 6 conductor cable.
Cable diameter: Ø5mm
Standard cable length for 10t – 20t: 12m, for 30t: 18m and for 40t – 100t: 20m.
Shield not connected to element.

6-wire diagram

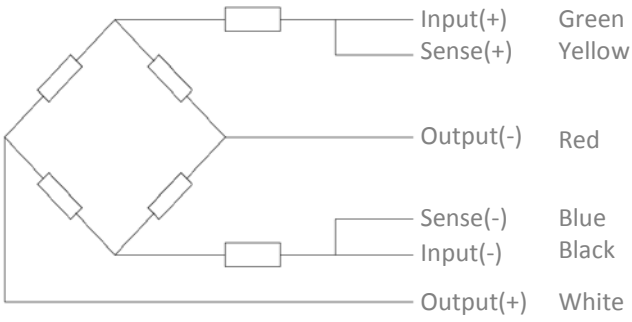

Specifications and dimensions are subject to change without notice and do not constitute any liability whatsoever.

Zemic Europe B.V.
Leerlooierstraat 8
4871 EN Etten-Leur
The Netherlands

T: +31 76 50 39480
F: +31 76 50 39481
info@zemic.nl
www.zemic.nl

Type BM14K Load Cell

Dimensions in mm

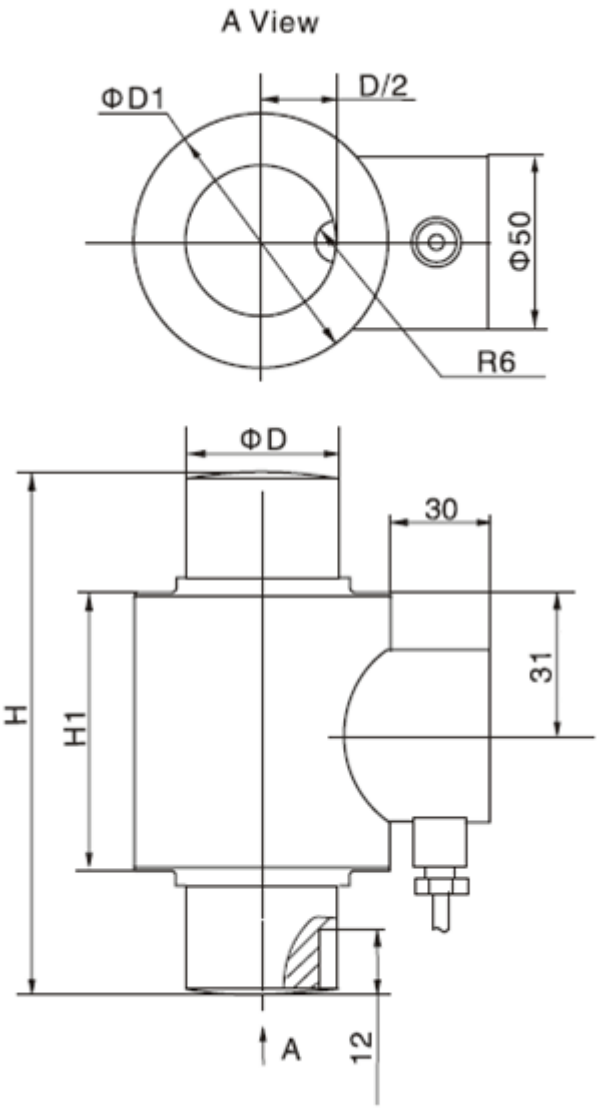

Dimension Capacity	H	H1	ØD	ØD1
10t, 15t	130	80	44	74
20t – 40t	150	92	44	74
50t, 60t	210	92	44	74
100t	260	121	64	93

Specifications and dimensions are subject to change without notice and do not constitute any liability whatsoever.

Zemic Europe B.V.
Leerlooierstraat 8
4871 EN Etten-Leur
The Netherlands

T: +31 76 50 39480
F: +31 76 50 39481
info@zemic.nl
www.zemic.nl