DINI ARGEO
Scales - Weighing systems

# BELT

## "E-BELT": SOFTWARE FOR 3590E/CPWE INDICATORS FOR MANAGEMENT OF CONTINUOUS DOSAGES ON BELT

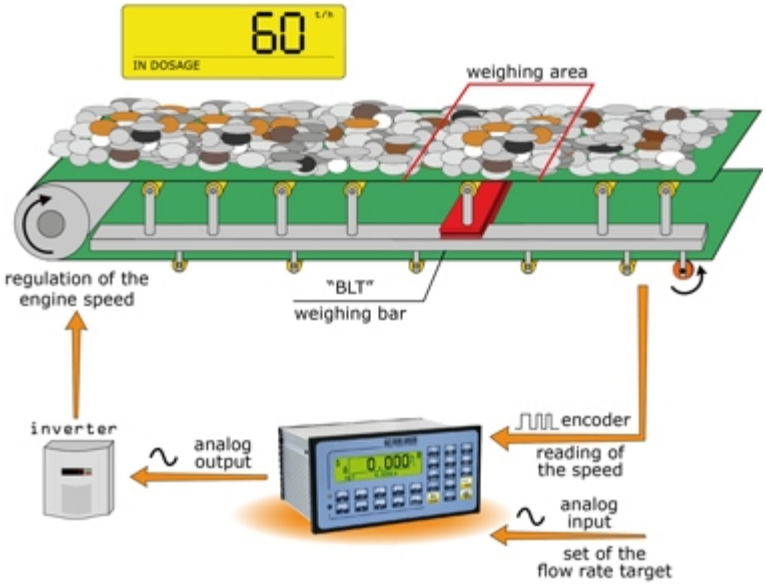


Software version for the measurement/integration of the weight, flow of material transitioning on the weighing belt, with memorisation of the quantity of dosed material; possibility of adjusting the flow through the 16 bit analogue output and PID control. Possibility of remote management of the instrument, through Sysway or Modbus RTU protocols, or Profibus through external optional interface.

Working in cooperation with:


***SC DATA SPEED SRL***

*STR DONATH N. 115/33 - 400331 - JUD. CLUJ*
*Tel. 0040-264566473 Fax. 0040-364-815440*
*office@cantare.com.ro*


The best solution
for advanced industrial
applications

## DOSAGE FUNCTIONS

- 2 selectable operation modes:
  - Instantaneous reading of the flow, in kg/h or t/h with displaying of the status of the system and of the dosed total.
  - Adjustment of the dosage hourly flow, in function of the pre-setted target, with PID algorithm.
- Visualisation of the hourly flow graph and wide range of data displayed on the display.
- Calibration of the flow reading function, for controlling the dosage performances.
- Reading filter of the hourly flow with configurable incidence and speed depending on the system.
- Programmable dosage target upon weight or upon time, with relative contact.
- Programmable start dosage delay, for synchronisation of various E-BELT systems in the dosage of material mixtures.
- Management of the slow flow with programmable activation threshold, for more precise dosages.
- Management of the dosage total under way and general total of dosages, printable and clearable independently from each other.
- Management of the automatic dosage from remote master or through Profibus DP or Modbus RTU protocol.
- Printing of the dosage data and the total.
- Completely programmable printouts, for compatibility with any ASCII printer manageable through the serial port.

## DATABASES

- Database of 100 products with: 5 alphanumeric description, hourly flow target, weight dosage target and initial value analogue output.
- Manual programming of the products or throught PC software (Dinitools).

## KEYBOARD FUNCTIONS

- START / RESTART dosage, PAUSE / RESET cycle and emptying of the belt out of the cycle.
- Quick switch of the hourly flow target and of the dosage target.
- Quick introduction and selection of the dosage data.

## I/O FUNCTIONS

- Activation cycle, START / RESTART dosage, PAUSE / RESET cycle and unloading of the belt out of the cycle, through external inputs.
- Impulse counter of the accumulated quantity through relay contact, for direct communication with PLC or external devices.
- Relay contacts dedicated for the complete management of the alarms and the blocks for off weight, off flow and belt side-slipping.
- Input and output with programmable functions.
- 16 bit analogue input (optional) for programming the hourly flow target.
- 16 bit analogue output (optional) proportional to the hourly flow (lector mode) or programamble for regulating the dosage speed (regulator mode).
- Serial communication protocol for programming the products and reading the cycle status.
- SYSWAY and MODBUS communication protocol for programming the dosage data and managing the cycle.
- PROFIBUS

  External Profibus interface (optional), for programming the dosage data and managing the cycle.
- Bluetooth

  Optional Bluetooth connection, for quick wireless programming of the product, through PC or PDA.

## SYSWAY, MODBUS, PROFIBUS FUNCTIONS

- READING THE DATA:
  - net weight
  - instantaneous flow
  - value of the instantaneous pid
  - partial total
  - general total
  - status of the optoisolated inputs
  - status of the optoisolated outputs
  - flow target (for the controller modes)
  - minimum flow, maximum flow
  - dosage time
  - target to be dosed
  - set point enabling/disabling value
  - status of the scale
- AVAILABLE COMMANDS:
  - dosage Start/Stop/Reset
  - programming of flow target, target to be dosed and dosage time
  - print format
  - reset of accumulated totals
  - setpoint programming

## DETAIL 1

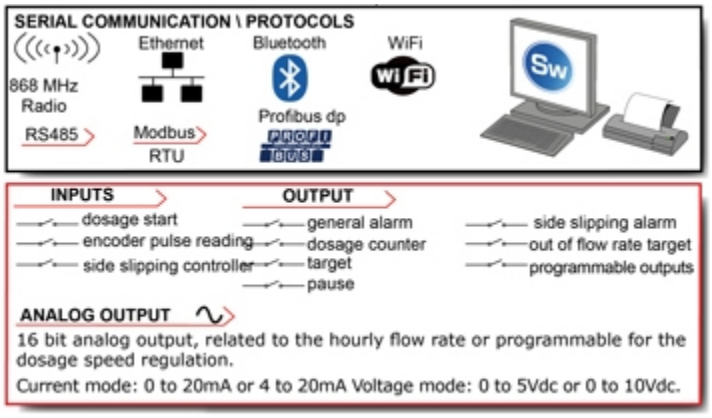


Communication modes and available inputs / outputs.

www.diniargeo.com




**DINI ARGEO FRANCE sarl**
Nogent-sur-Marne

**DINI ARGEO GMBH**
Sinsheim - Germany

**DINI ARGEO UK Ltd**
Taunton - United Kingdom

**DINI ARGEO WEIGHING INSTRUMENTS Ltd**
Shanghai - China

**DINI ARGEO WEIGHBRIDGES**
Calto (RO) – Italy

DINI ARGEO
Scales - Weighing systems

**HEAD OFFICE**
Via Della Fisica, 20
41042 Spezzano di Fiorano Modena - Italy

ATEX

ISO 9001:2008

***SC DATA SPEED SRL***

*STR DONATH N. 115/33 - 400331 - JUD. CLUJ*

*Tel. 0040-264566473 Fax. 0040-364-815440*

*office@cantare.com.ro*

***SALES AND TECHNICAL ASSISTANCE SERVICE***