TYPE: PTC-1

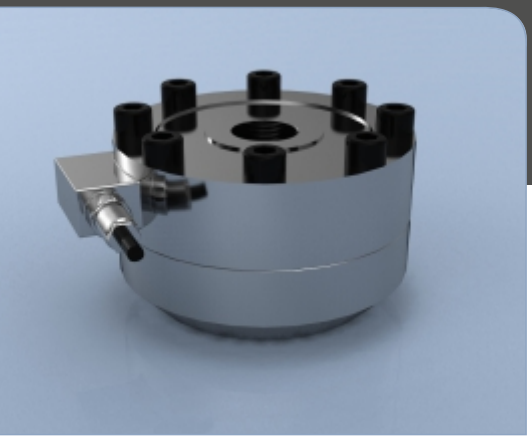

PTC-1 Stainless Steel Low Profile Universal Load Cell

Features

- Ranges from 5 to 5000kN
- Stainless steel construction
- Environmentally sealed to IP67
- Low profile
- Hose/conduit fitting facility as standard
- High thermal stability
- High natural frequency

Typical Applications

- Structural testing
- Jack load monitoring
- Airframe testing
- Material test machine feedback
- Fatigue testing rigs

Description

The PTC-1 series of load cells are based on the conventional low profile or pancake load cell principle. The internal construction is a diaphragm design, offering a lower cost solution to conventional shear web designs, while still offering high natural frequency, low deflection and excellent resistance to side and torsion forces.

The PTC-1 is constructed from stainless steel to give excellent corrosion protection. There is an optional mounting base available, which is required if the load cell is to be used in tension. The mounting base is also constructed from stainless steel. The standard load cell is supplied with an integral cable and the facility to attach a protective hose or conduit.

Ideally suited to many testing applications where high stability and low height are essential requirements, the PTC-1 can be supplied calibrated as a complete ready to go system. Also available is a range of associate instrumentation.

Specification

Rated load (kN)	5, 10, 25, 50, 100, 200, 300, 500, 750, 1000, 2000, 3000*, 5000* * 3000kN & 5000kN are only suitable for use in tension to 2500kN
Overload range	150% of full scale output (FSO)
Ultimate breaking load	>300% FSO
Maximum transverse load	100% FSO
Maximum permissible dynamic load	75% FSO (through centre thread only)
Output	2mV/V (±0.1%)
Zero balance	<±0.02mVV
Non-linearity	<±0.05% FSO
Hysteresis	<±0.05% FSO
Non-repeatablity	<±0.1% FSO
Transverse load effects (at 10% FSO)	<±0.03% FSO
Excitation voltage	10vdc recommended, 18vdc maximum
Input resistance	800Ω (5kN to 300kN), 430Ω (500kN to 5000kN)
Output resistance	705Ω (5kN to 300kN), 352Ω (500kN to 2000kN)
Insulation resistance	>5GΩ @50vdc
Compensated temperature range	-10 to +40°C
Operating temperature range	-10 to +70°C
Storage temperature range	-20 to +80°C
Zero temperature co-efficient	<±0.003% of FSO/°C
Span temperature co-efficient	<±0.003% of FSO/°C
Deflection at rated load	0.06mm (5kN to 25kN) 0.09mm (50kN to 100kN) 0.17mm (200kN to 500kN) 0.23mm (750kN to 1000kN) 0.21mm (2000kN to 5000kN)
Natural Frequency	5kN - 10kN: 2.5kHz, 25kN: 4.8kHz, 50kN: 3.8kHz 100kN: 5.8kHz, 200kN: 5.7kHz, 300kN: 7.3kHz, 500kN: 9.8kHz, 750kN - 1000kN: 18.2kHz, 2000kN: 18kHz 3000kN - 5000kN: 15.7kHz
Environmental protection level	IP67
Electrical connections	5 metres PUR 4-core cable
Wiring connections	+ve supply: Red -ve supply: Black +ve signal: White -ve signal: Yellow

Available Options

- Mounting base
- Load cap assembly
- TEDS option (when used with TR150 handheld display)

LCM Systems Ltd
Unit 15, Newport Business Park
Barry Way, Newport
Isle of Wight PO30 5GY UK
Tel: +44 (0)1983 249264
Fax: +44 (0)1983 249266
sales@lcmsystems.com
www.lcmsystems.com

LCM SYSTEMS
Solutions in Load Cell Technology

PTC-1 Stainless Steel Low Profile Universal Load Cell

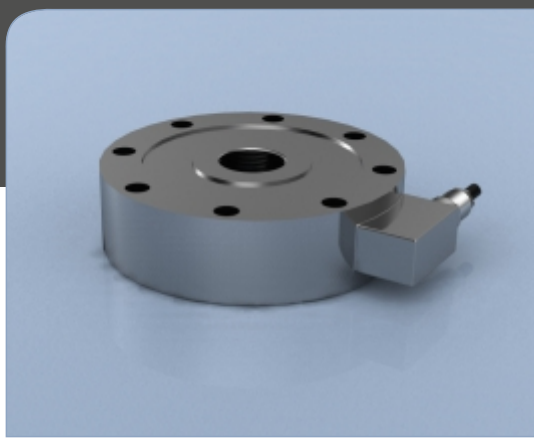

Dimensions

All dimensions are in mm

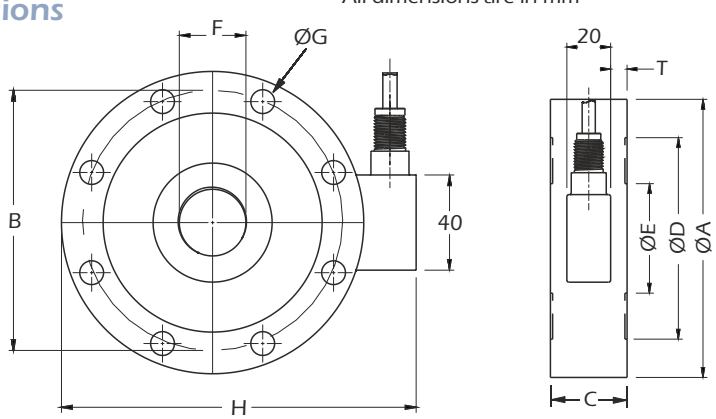

Rating (kN)	ØA	B	C	ØD	ØE	F	ØG	H	T	Weight (kg)	Resolution (kN)
5	100	86	35	72	32	M20 x 1.5	6 holes Ø9	121	7.5	1.6	0.001
10	100	86	35	72	32	M20 x 1.5	6 holes Ø9	121	7.5	1.6	0.002
25	100	86	35	72	32	M20 x 1.5	6 holes Ø9	121	7.5	1.6	0.005
50	127	110	35	92	47	M30 x 2	8 holes Ø10.5	149	7.5	2.5	0.01
100	127	110	35	92	47	M30 x 2	8 holes Ø10.5	149	7.5	2.5	0.02
200	165	138	50	108	62	M42 x 3	12 holes Ø17	188	15	5.8	0.05
300	165	138	50	108	62	M42 x 3	12 holes Ø17	188	15	5.8	0.1
500	165	138	60	108	62	M42 x 3	12 holes Ø17	188	20	6.8	0.1
750	230	185	80	145	98	M60 x 3	12 holes Ø26	254	30	16.5	0.2
1000	230	185	80	145	98	M60 x 3	12 holes Ø26	254	30	16.5	0.2
2000	300	250	100	198	132	M100 x 3	16 holes Ø25	323	40	35	0.5
3000	350	294	120	238	160	M100 x 3	16 holes Ø28	367	40	63	1
5000	350	294	130	238	160	M100 x 3	16 holes Ø28	367	45	63	1

Note: Default calibration of these load cells will be in compression.

Mounting base - option MB

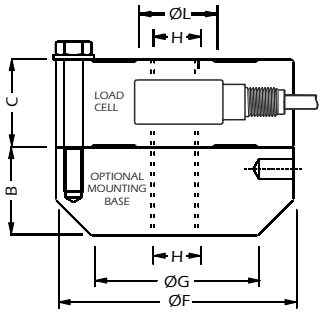

Loading cap assembly - option LC

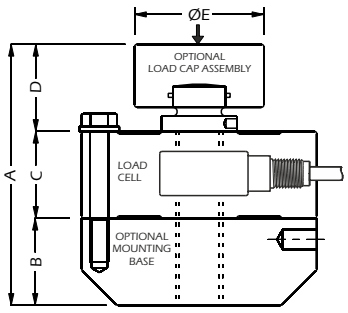

Rating kN	A	B	C	D	ØE	ØF	ØG	H	ØL
5, 10, 25	109	37	35	37	57	100	70	M20 X 1.5	32
50, 100	110	37	35	38	76	127	100	M30 X 2	47
200, 300	159	60	50	59	76	165	100	M42 X 3	62
500	169	60	60	59	76	165	100	M42 X 3	62
750, 1000	253	85	80	88	126	230	180	M60 X 3	98
2000	309	85	100	124	129	300	250	M100 X 3	132
3000	384	120	120	144	168	350	330	M100 x 3	160
5000	394	120	130	144	168	350	330	M100 x 3	160

For optimum performance, LCM Systems recommends 12.9 grade socket head cap screws to bolt down the load cell to any mounting assemblies. The bolts should be tightened to the torques shown in the table below. If a load cell is ordered with an optional mounting base, then this will be supplied pre-assembled and torqued down.

Bolt size	M8	M10	M16	M24	M27
Tightening torque	40Nm	70Nm	368Nm	460Nm	1500Nm

www.lcmsystems.com

Due to continual product development, LCM Systems Ltd reserves the right to alter product specifications without prior notice.

Issue No. 2
Issue date: 09/12/2015
APPROVED
(unapproved if printed)