TLM8 PROFIBUS

DIGITAL - ANALOG WEIGHT TRANSMITTER

LAUMAS® ELETTRONICA

IP67 ANALOG OUTPUT RS485

8 INDIPENDENT READING CHANNELS FOR LOAD CELLS

MODBUS RTU







DESCRIPTION

- Weighing system with 8 independent reading channels for load cells.
- The TLM8 transmitter allows to have same benefits and performance of an advanced digital weighing system even using analog load cells.
- Omega/DIN rail mounting suitable for back panel or junction box.
- Dimensions: 148x92x60 mm.
- Backlit graphic LCD display, transmissive STN, white on blue, 128x64 pixel resolution, 60x32 mm visible area.
- Five-key keypad for the system calibration.
- TEST key for direct access to the diagnostic functions.
- Extractable screw terminal boards.

INPUT/OUTPUT AND FIELDBUSES

- Analog output 16bit.
- 3 logic inputs.
- 5 logic relay outputs.
- RS485 serial port for connection to PC/PLC, remote display and printer.
- ModBus RTU or ASCII Laumas protocol.
- Slave PROFIBUS DP port (max 32 instruments without line repeaters; max 126 instruments with line repeaters).

Rev. 07/2015

LAUMAS Elettronica srl • Phone: (+39) 0521 683124 • Fax (+39) 0521 681091
UFFICIO VENDITE ITALIA: commerciale@laumas.it • EXPORT SALES DEPARTMENT: sales@luamas.it

ISO 9001:2008
ISO 14001:2004

CERTIFICATIONS

OIML R76:2006, III class, 3x10000 divisions 0.2 μV/VSI

CERTIFICAZIONI / CERTIFICATIONS

M	Initial verification (Legal Metrology)
c UL us	UL Recognized component - Complies with the United States and Canada regulations
EAC	Complies with the Eurasian Custom Union regulations (Russia, Belarus, Kazakhstan)

OPTIONS ON REQUEST

	DESCRIPTION		CODE
	Alibi memory		OPZWALIBI
	IP67 ABS waterproof box with transparent cover. Dimensions: 185x185x130 mm (centre distance164x164 mm)		
	- transparent cover		CASTLG
	- transparent cover; 8+3 cable glands-plugs		CASTLG8PG9
	- transparent cover; 8+3 PVC end fittings		CASTLG8GUA
	IP67 ABS waterproof box with external keyboard. Dimensions: 185x185x130 mm (centre distance164x164 mm)		
	- external keyboard		CASTLGTAST
	- external keyboard; 8+3 cable glands-plugs		CASTLGTAST8PG9
	- external keyboard; 8+3 PVC end fittings		CASTLGTAST8GUA

Rev. 07/2015

TLM8 PROFIBUS

DIGITAL - ANALOG WEIGHT TRANSMITTER

LAUMAS® ELETTRONICA

MAIN FUNCTIONS

- 8 independent channels for load cells: monitoring and direct management of the individual load cells connected.
- RS485 (Modbus RTU)/fieldbus transmission of the divisions for the 8 independent reading channels.
- Digital equalization: the instrument allows to equalize the connected load cells response, in a fast and reliable over time.
- Load distribution synoptic analysis on 8 channels with archive backups: storing, retrieving, printing.
- Automatic diagnostics: the instrument is designed to store the percentage value of load distribution for each channel. The diagnostic function makes comparisons between the recorded values and if a significant variation between the values is detected during normal operation, the instrument displays an alarm alternating with the weight value.

  Depending on the weighing system type it's possible to perform:
  - Load automatic diagnostics: load distribution control in constant barycentre systems (e.g. liquids silo).
  - Automatic diagnostics on zero: check on load cells drift state (eg. silo, weighbridge, platformes).
- Event log: data backups archive in chronological order of the last 50 events related to calibrations, zero settings, errors and equalizations. The information can be stored, retrieved and printed.
- Zero-setting of weighing system.
- Theoretical calibration by using buttons.
- Real calibration with linearization up to 5 points.
- 3 configurable inputs can be used for net/gross function, semi-automatic zero, peak, print and remote control.
- 5 setpoints configurable as normally open or normally closed or remote control.
- Setting of hysteresis value for each setpoint.
- Peak.
- Anti-peak.
- Filter to stabilize the weight variations.
- Semi-automatic tare and predetermined tare (net/gross weight).
- Automatic zero setting at power-on.
- Zero tracking.
- Semi-automatic zero.

8 INDEPENDENT CHANNELS

The screen shows the automatic standard operating mode and the activation/deactivation status of individual channels to indicate the presence/ absence of connection with load cells.

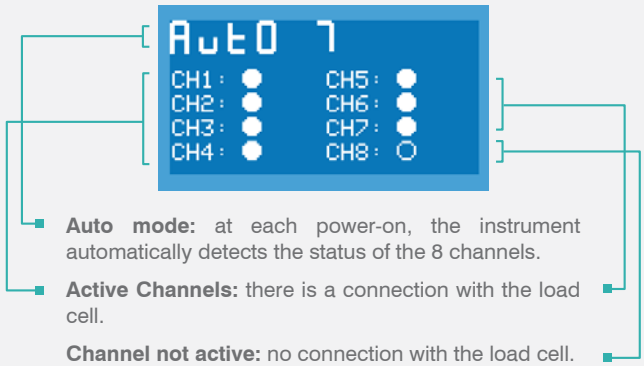

LOAD DISTRIBUTION

The TLM8 displays graphically the current load distribution on each active channel.

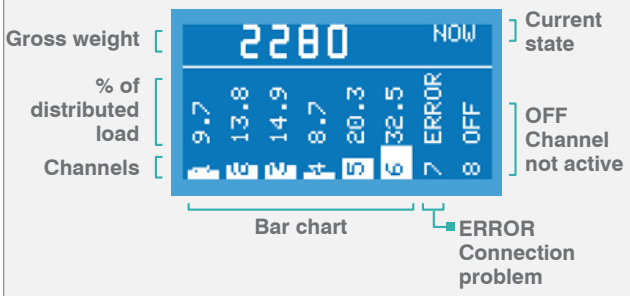

The TLM8 displays graphically the load cells response signal in mV for each active channel.

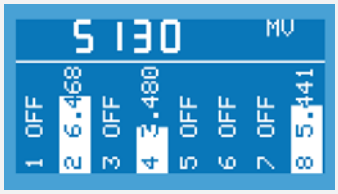

EQUALIZATION WITH JUNCTION BOXES

The equalization procedure with junction boxes and trimmer requires more manual steps and over time it can undergo drift phenomena over time, requiring subsequent repetitions of the same procedure.

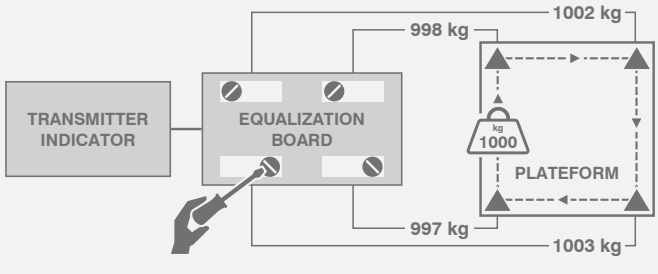

DIGITAL EQUALIZATION

The TLM8 does not require the use of junction box, thanks to the support of 8 independent channels; furthermore the digital equalizer function simplifies the procedure to a single step and it is free of drift over time.

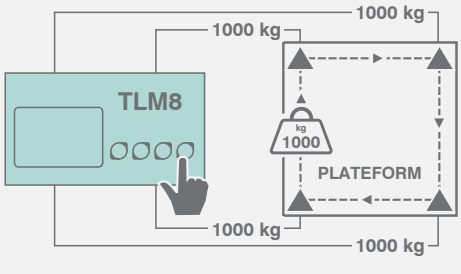

Rev. 07/2015

LAUMAS Elettronica srl • Phone: (+39) 0521 683124 • Fax (+39) 0521 681091
UFFICIO VENDITE ITALIA: commerciale@laumas.it • EXPORT SALES DEPARTMENT: sales@luamas.it

ISO 9001:2008
ISO 14001:2004

TLM8 PROFIBUS

DIGITAL - ANALOG WEIGHT TRANSMITTER

LAUMAS® ELETTRONICA

METROLOGICAL SPECIFICATIONS OF TYPE-APPROVED INSTRUMENTS

- Three operation mode: single interval or multiple ranges (max 3) or multi-interval (max 3).
- Calibration via keyboard is protected through seals for the access to a setting jumper or installer password or hardware device
- Semi-automatic tare and predetermined tare.
- Semi-automatic zero.
- Weight subdivisions displaying (1/10 e).
- Alibi memory (option on request).

TECHNICAL FEATURES

Power supply and Consumption	12-24 VDC ±10%; 5 W
Number of load cells • Connection	max 16 (350 Ω) • 4 or 6 wires
Load cells supply	5 VDC/240 mA
Load cell's sensitivity • Measure range	max 7 mV/V • max ±39 mV
Linearity • Linearity of the analog output	<0.01% Full scale • <0.01% Full scale
Thermal drift • Thermal drift of the analog output	<0.0005% Full scale/°C • <0.003% Full scale/°C
A/D Converter	8 channels - 24 bit (16000000 points) 4.8 kHz
Divisions	max 999999 • 0,01 μV/d *(with measure range ±10 mV and sensitivity 2 mV/V)*
Divisions *(CE-M approved)*	max 3x10000e • 0,2 μV/VSI *(with measure range ±10 mV and sensitivity 2 mV/V)*
Conversion per second	max 600
Decimals • Display increments	0 - 4 • x1 x2 x5 x10 x20 x50 x100
Digital filter • Conversion rate	0.006 - 7 s • 5 - 600 Hz
Relay logic outputs	n. 5 - max 115 VAC/150 mA
Logic inputs	n. 3 - optoisolated 5 - 24 VDC PNP
Analog output	16 bit, 0-20 mA; 4-20 mA (max 300 Ω); 0-10 V; 0-5 V (min. 10 kΩ).
Serial port	RS485
Baud rate	2400, 4800, 9600, 19200, 38400, 115200 *(bit/s)*
PROFIBUS DP port	up to 12 *(Mbit/s)*
Humidity *(condensate free)*	85%
Storage temperature	-30°C +80°C
Working temperature	-20°C +60°C
Working temperature *(CE-M approved)*	-10°C +40°C
Box version	IP67 polycarbonate with transparent cover; 185x185x130mm; 8+2 cable glands-plugs

Rev. 07/2015

LAUMAS Elettronica srl • Phone: (+39) 0521 683124 • Fax (+39) 0521 681091
UFFICIO VENDITE ITALIA: commerciale@laumas.it • EXPORT SALES DEPARTMENT: sales@luamas.it

ISO 9001:2008
ISO 14001:2004