MASS COMPARATOR WPY/KB

release date 15-02-2013

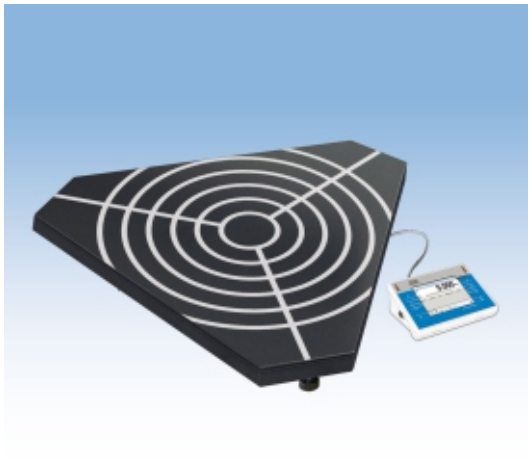

The newest line of Radwag Mass Comparators enables adjusting mass standards and weights according to the OIML recommendations (R-111) from 100 kg to 2000 kg for M1 class and lower.

The comparators are used both for ensuring traceability of mass measurements, and verification of weights in accordance with legal metrology. RADWAG Mass Comparators have gained recognition among Accredited Calibration Laboratories, in many countries.

Mass comparators series WPY/KB comprise two components. One of them holds the electronic module, and the other precise multi-sensor measuring system.
The weighing platform made of steel features centring rings enabling precise positioning of the weights. The comparator features intuitive and user friendly menu.

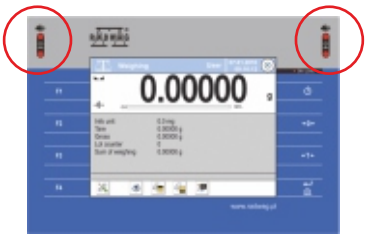

Infrared proximity sensors

Optional functions:
- PRINT function
- TARE function
- sensor's sensitivity



Data exchange through USB data storage device

- software update
- exporting weighing data
- exporting/importing databases and settings



Communication interface

- Ethernet
- RS 232
- 2×USB
- 2×digital input / output

Technical data:

	WPY 200/KB	WPY 500/KB	WPY 1000/KB	WPY 2000/KB
Max capacity	210 kg	510 kg	1100 kg	2100 kg
Readability	1 g (for mass standards 100kg)	2 g (for mass standards 200kg)	5 g (for mass standards 500kg)	10 g (for mass standards 1000kg)
	2 g (for mass standards 200kg)	5 g (for mass standards 500kg)	10 g (for mass standards 1000kg)	20 g (for mass standards 2000kg)
Repeatability *	1 g (for mass standards 100kg)	2 g (for mass standards 200kg)	4 g (for mass standards 500kg)	8 g (for mass standards 1000kg)
	2 g (for mass standards 200kg)	4 g (for mass standards 500kg)	8 g (for mass standards 1000kg)	16 g (for mass standards 2000kg)
Electric compensation range	0 ÷ 210 kg	0 ÷ 510 kg	0 ÷ 1100 kg	0 ÷ 2100 kg
Supplementary weights	none			
Stabilization time	120 s			
Adjustment	external			
Power supply	13,5 ÷ 16 V DC / 2,1 A			
Pan size	ø1000 mm			
Weighing unit dimensions	1347 × 1166 × 200 mm			
Control unit dimensions	206 × 140 × 70 mm			
Net weight	200 kg			
Ambient conditions:				
Working temperatue	+15° ÷ +35°C			
Change rate of working temperature	±0,5°C/h			
Atmospheric humidity	30% ÷ 70%			
Change rate of atmospheric humidity	±10%/4h			

* 6 cycles ABBA

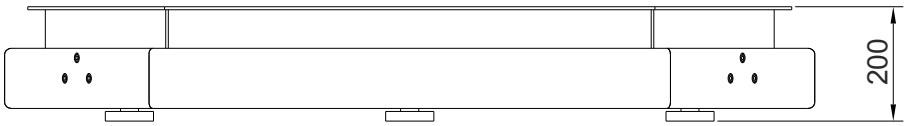

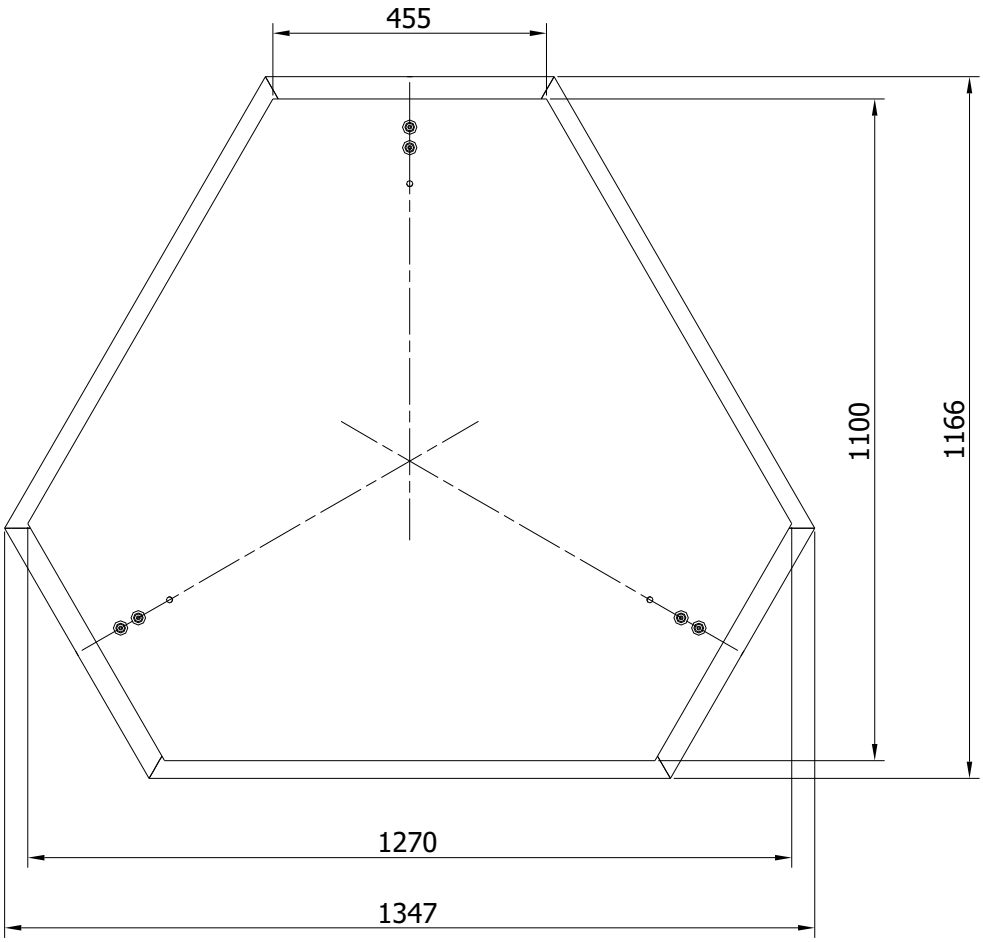

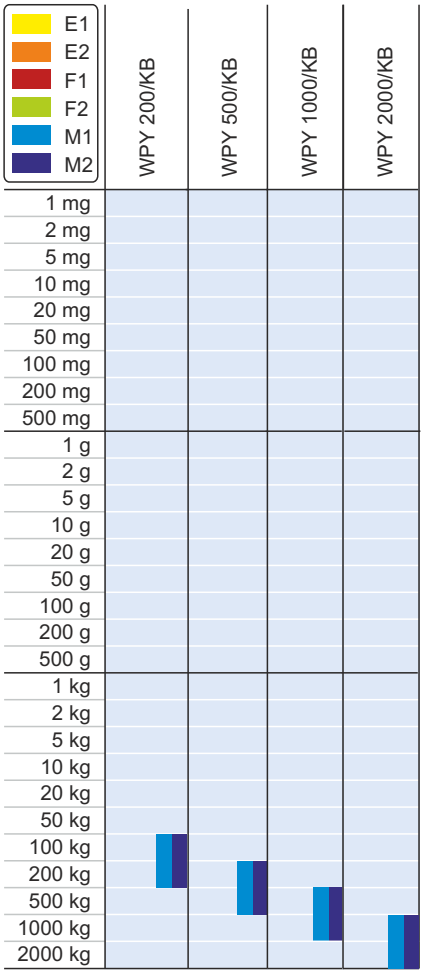

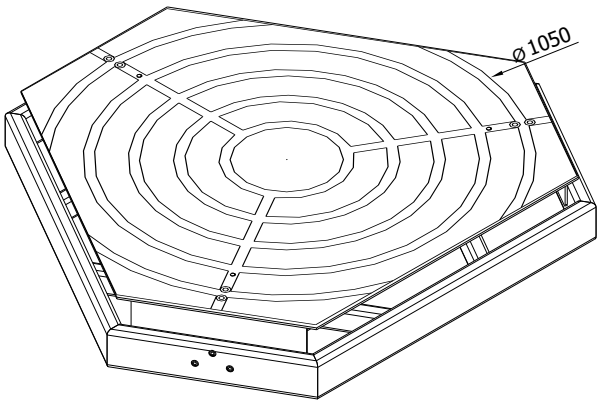

Additional equipment:

Pinters: Kafka, Epson, Citizen	Transponder card scanner
Additional display: small and large size	Barcode scanner
External adjustment weight	Power loop
Temperature and humidity sensors installed inside the weighing chamber	PC software for network management of calibration process
PC keyboard	PC software: Label Editor, PW-WIN, RAD-KEY

RADWAG Balances and Scales · Poland · 26-600 Radom, 28 Bracka Street · tel. +48 48 3848800 · fax. +48 48 3850010 · e-mail:export@radwag.com · www.radwag.com