ANALYTICAL BALANCES XA 3Y.A



XA 3Y.A series of analytical balances feature the new electronics and modern technology.

Measurement reliability and accuracy are maintained by automatic internal adjustment / calibration system triggered by time flow or temperature conditions.

XA 3Y.A series of balances provide spacious weighing chamber with automatic opened doors. XA 3Y series features a touch panel covering a 5.7" colour graphic display, which boosts balance's operation. The balances are designed on new software version providing intuitive operation!

- Parts counting
- Filling
- Animal weighing
- Density determination
- Checkweighing
- Percent setup
- Statistics
- Formulation
- Pipette calibration **
- GLP procedures
- Infrared sensors

** function only available as an extra option of the software

- **Automatically opened side glass doors!**
- **New electronics and technological solutions!**
- **New software ensuring intuitive and simple operation!**
- **Removable side and top glass parts of a weighing chamber!**

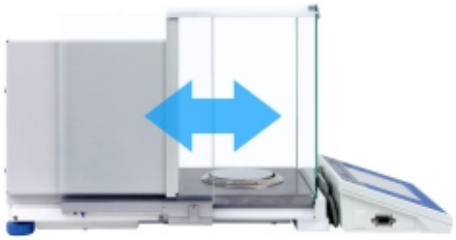

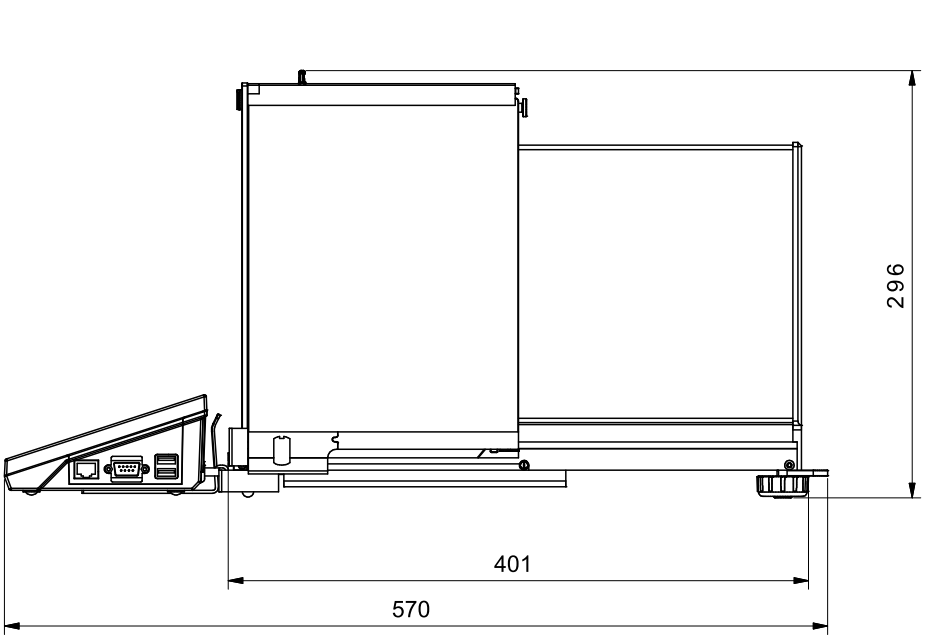

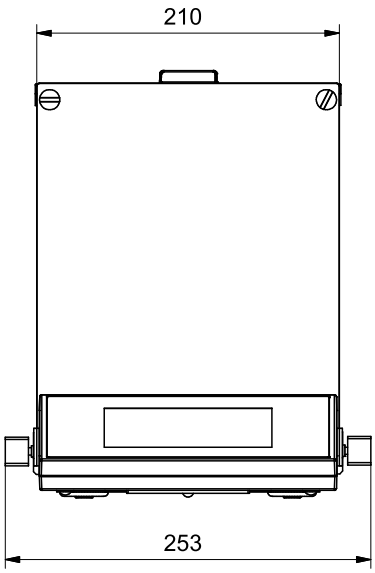

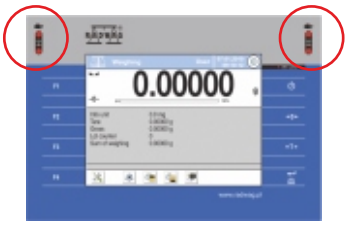

Infrared proximity sensors

- PRINT function
- TARE function
- opening weighing chambers
- sensors' sensitivity



Data exchange through USB storage devices

- export weighing data
- export/import databases
- export/import balance settings
- exchanging data between balances



Communication interfaces

- Ethernet 10/100 Mbps
- RS 232
- 2×USB 2.0
- 4 in/out

Technical data:

	XA 52.3Y.A M	XA 110.3Y.A M	XA 210.3Y.A M	XA 82/220.3Y.A M
Max capacity	52 g	100 g	210 g	82/220 g
Min load	1 mg	1 mg	1 mg	1 mg
Readability	0,01 mg	0,01 mg	0,01 mg	0,01/0,1 mg
Tare range	-52 g	-100 g	-210 g	-220 g
Working temperature	+10° ÷ +40°C			
Relative air humidity **	40% ÷ 80%			
Repeatability *	0,01 mg	0,02 mg (to 50g) 0,03 mg (50g÷100g)	0,02 mg (to 20g) 0,025 mg (20÷60g) 0,04 mg (60g÷210g)	0,02 mg (to 50g) 0,03 mg (50÷82g) 0,08 mg (82g÷220g)
Linearity	±0,03 mg	±0,07 mg	±0,1 mg	±0,06/0,2 mg
Eccentric load deviation	0,03 mg	0,07 mg	0,1 mg	0,2 mg
Sensitivity offset	$2 \times 10^{-6} \times Rt$			
Sensitivity temperature drift	1×10^{-6} / °C × Rt			
Sensitivity time drift	1×10^{-6} / Year × Rt			
Minimum weight (USP)	60 mg			
Minimum weight (U = 1%, k = 2)	4 mg			
Stabilization time	5 s	5 s	5 s	5 s
Interface	2×USB, RS 232, Ethernet, 4in / 4out (digital)			
Power supply	13,5 ÷ 16 V DC / 2,1 A			
Adjustment / Calibration	internal (automatic)			
Display	5,7" touch screen			
Pan size	ø 85 mm			
Weighing chamber dimensions	170×200×220 mm			
Net weight/Gross weight	12,6 / 16,3 kg	12,6 / 16,3 kg	12,6 / 16,3 kg	12,7 / 16,4 kg
Packaging size	715×385×485 mm			

Rt - net weight

* Repeatability is expressed as a standard deviation from 10 weighing cycles (mass of 20g for balances with d=0,01mg and 220g for balnces with d=0,1mg)

** Non-condensing conditions

Technical data:

	XA 220.3Y.A M	XA 310.3Y.A M	XA 510.3Y.A -
Max capacity	220 g	310 g	510 g
Min load	10 mg	10 mg	10 mg
Readability	0,1 mg	0,1 mg	0,1 mg
Tare range	-220 g	-310 g	-510 g
Working temperature		+10° ÷ +40°C	
Relative air humidity		40% ÷ 80%	
Repeatability *	0,08 mg	0,08 mg (to 220g) 0,2 mg (220g÷310g)	0,08 mg
Linearity	±0,2 mg	±0,3 mg	±0,3 mg
Eccentric load deviation	0,2 mg	0,3 mg	0,3 mg
Sensitivity offset		$2 \times 10^{-6} \times Rt$	
Sensitivity temperature drift		1×10^{-6} / °C × Rt	
Sensitivity time drift		1×10^{-6} / Year × Rt	
Minimum weight (USP)		240 mg	
Minimum weight (U = 1%, k = 2)		16 mg	
Stabilization time		3 s	
Interface		2×USB, RS 232, Ethernet, 4 in / 4 out (digital)	
Power supply		13,5 ÷ 16 V DC / 2,1 A	
Adjustment / Calibration		internal (automatic)	
Display		5,7" touch screen	
Pan size		ø 100 mm	
Weighing chamber dimensions		170×200×220 mm	
Net weight/Gross weight	12,7 / 16,4 kg	12,7 / 16,4 kg	12,7 / 16,4 kg
Packaging size		715×385×485 mm	

Rt - net weight

* Repeatability is expressed as a standard deviation from 10 weighing cycles (mass of 20g for balances with d=0,01mg and 220g for balnces with d=0,1mg)

Additional equipment:

Anti vibration table for laboratory balances	Density determination kit
Professional weighing table	LCD display „WD-5/3Y”
Kafka thermal printer	PC keyboard
Epson impact printer	Additional adapter for pipettes calibration
Citizen label printer	Power adapter ZR-02
Holders for laboratory vessels	Mass standard
Foot tare and print buttons	Antistatic cable
PW-WIN 2004 computer software	Barcode scanner
RAD-KEY 2000 computer software	RS 232 cable: scale - thermal printer: P0136
Pipettes computer software	RS 232 cable: scale - "Epson/Citizen" printer: P0151
Antistatic ionizer DJ-02	RS 232 cable: scale - computer: P0108
Ambient conditions module	