Type BM-24-401/402/403

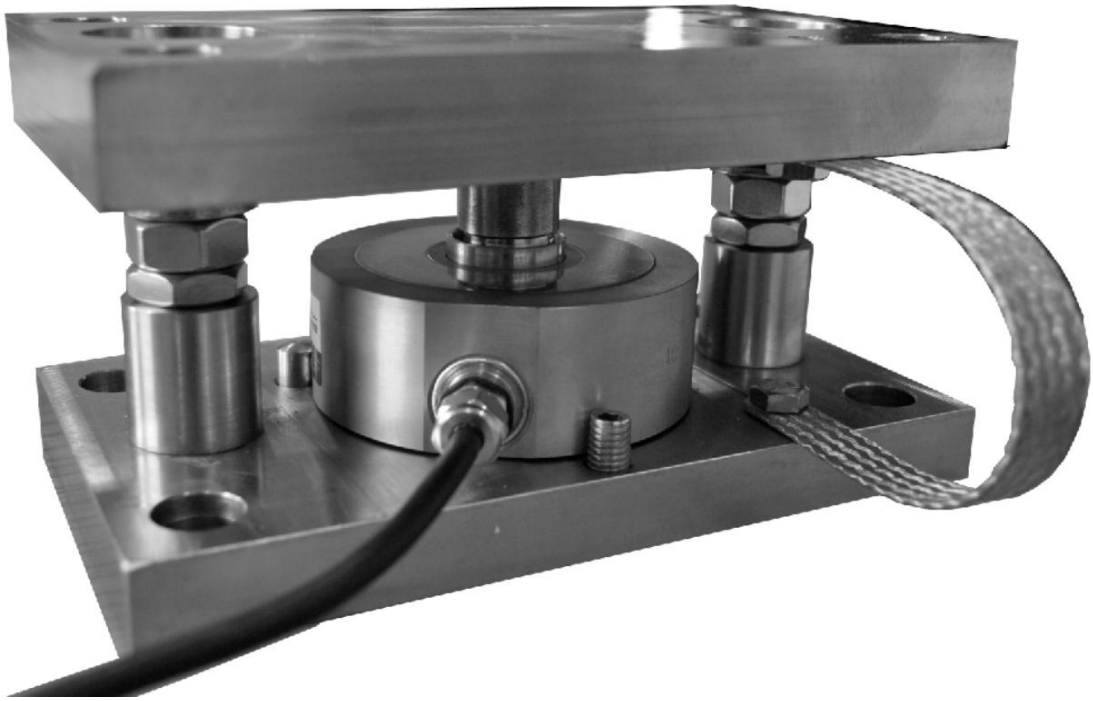

Short description

- Easy installation
- Built-in horizontal movement control
- Can be used in hazardous environments
- Lift-off protection
- Stainless Steel
- Can be used with Load Cell models: BM24R

Available models

Model	Capacity	Full article description	Part number
BM-24-401	0.25t – 1t	BM-24-401-0.25/1t	2240010
BM-24-402	2t – 5t	BM-24-402-2/5t	2240020
BM-24-403	10 – 13t	BM-24-403-10/13t	2240030

Detailed specifications BM-24-401/402/403

Type	BM-24-401	BM-24-402	BM-24-403
Maximum vertical force (down)	15 kN	30 kN	50 kN
Maximum vertical force (up)	10 kN	20 kN	30 kN
Maximum horizontal force	5 kN	10 kN	20 kN
Maximum horizontal movement	+3 / -3 mm	+3 / -3 mm	+3 / -3 mm
Installation height	80 mm	105 mm	117 mm
Working height	75 mm	100 mm	110 mm

Specifications and dimensions are subject to change without notice and do not constitute any liability whatsoever.

Zemic Europe B.V.
Leerlooierstraat 8
4871 EN Etten-Leur
The Netherlands

T: +31 76 50 39480
F: +31 76 50 39481
info@zemic.nl
www.zemic.nl

Type BM-24-401/402/403

Dimensions in mm

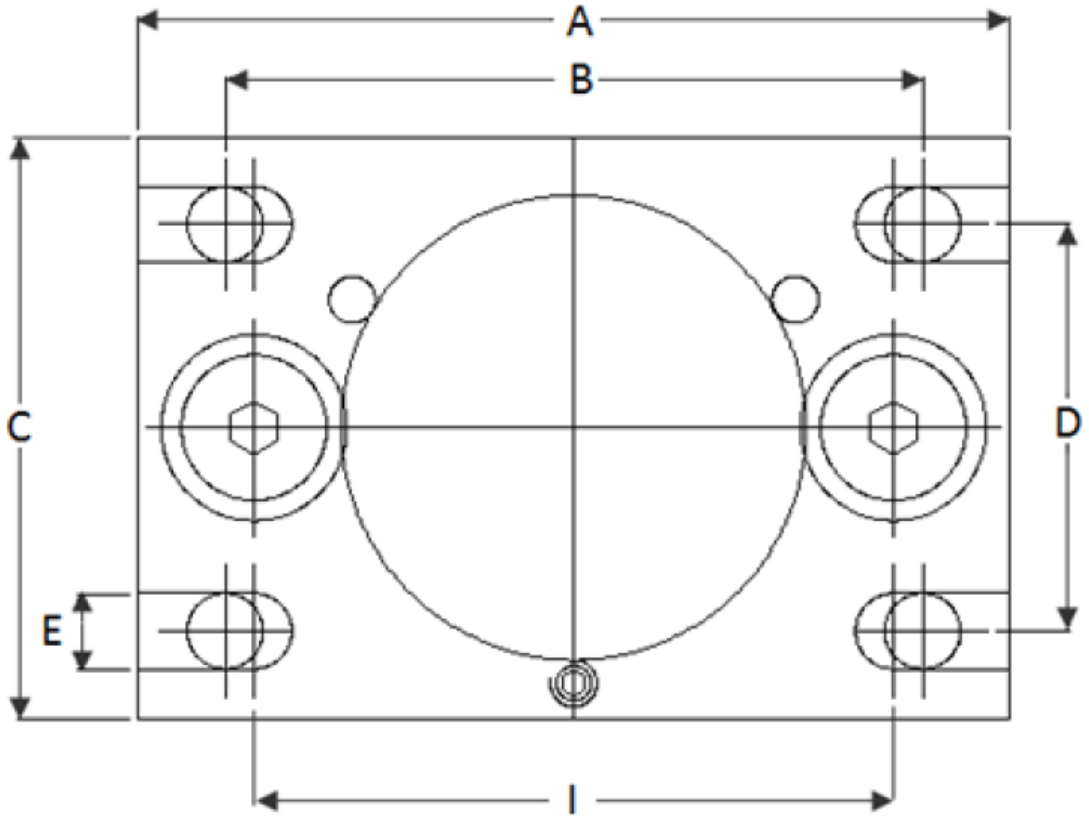

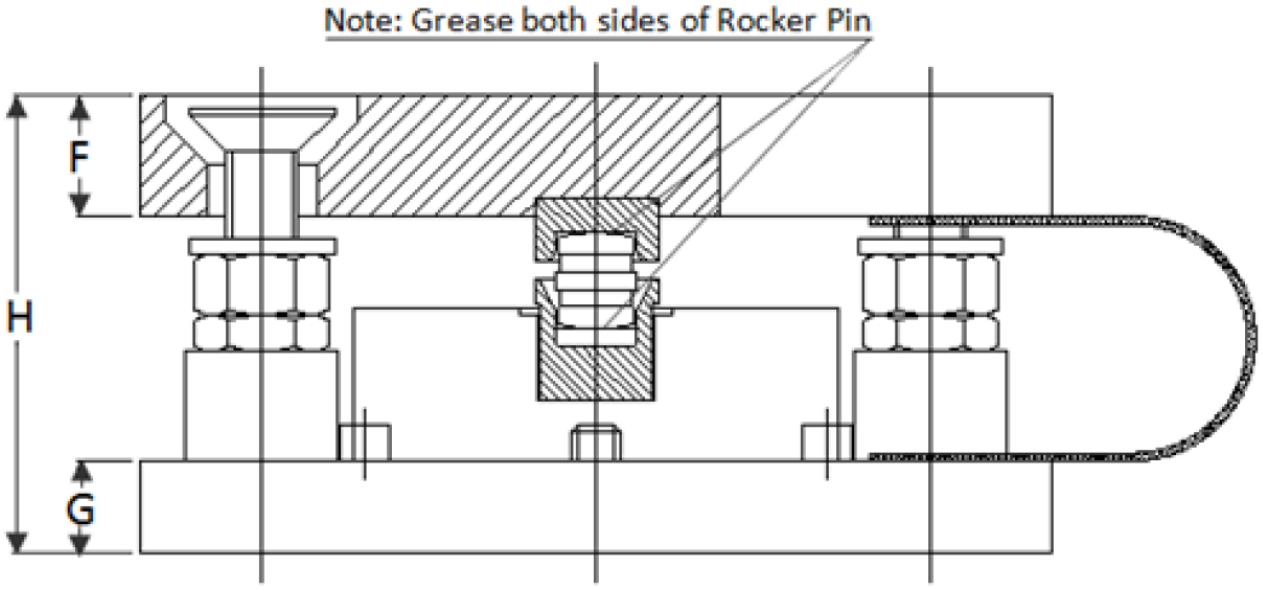

Note: Load cell not included in mount delivery

Type	A	B	C	D	ØE	F	G	H	I
BM-24-401	150	120	100	70	14	20	15	75	110
BM-24-402	160	120	110	70	16	20	20	100	N/A
BM-24-403	210	175	120	85	18	25	20	110	N/A

Specifications and dimensions are subject to change without notice and do not constitute any liability whatsoever.

Zemic Europe B.V.
Leerlooierstraat 8
4871 EN Etten-Leur
The Netherlands

T: +31 76 50 39480
F: +31 76 50 39481
info@zemic.nl
www.zemic.nl

Installation Instruction

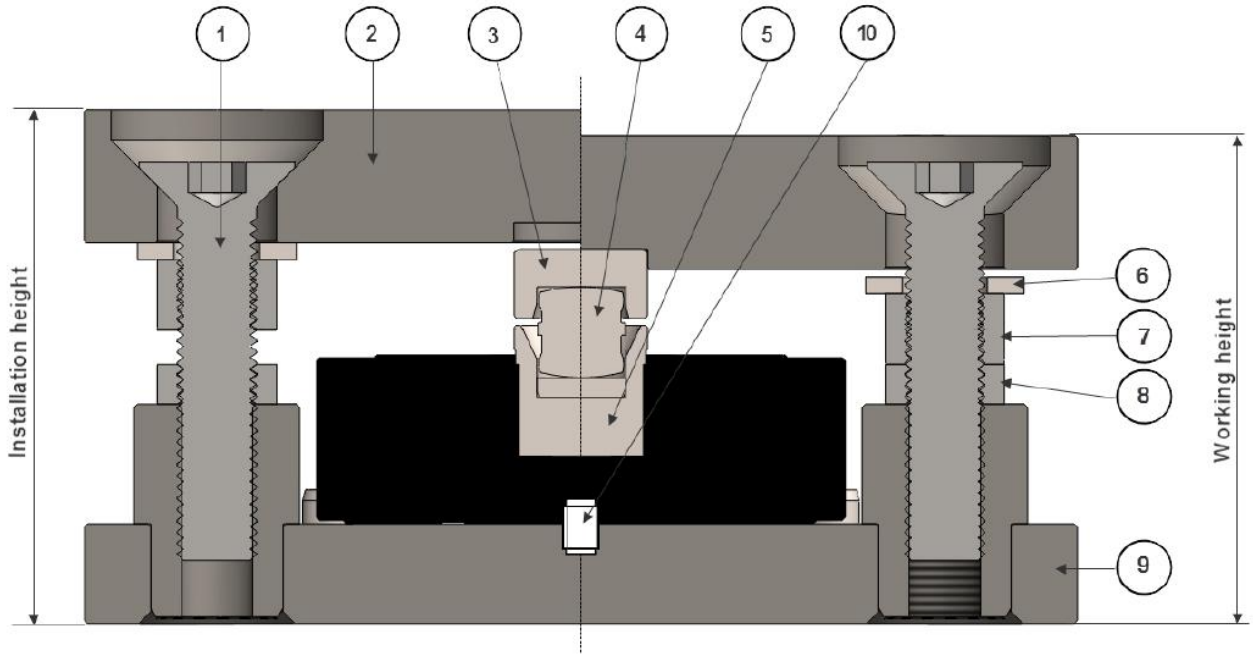

The assembly guidelines should be read carefully in order to ensure a correct installation and safe operation.

1. The mount should be installed without the BM24R Load Cell present in the mount.

2. Set the mount to the installation height by adjusting the bolt (item 1) and nut (item 7). The top plate (item 2) should be parallel to the base plate (item 9) and locked between the bolt and nut (items 1 and 6).

3. Lock the bolt (item 1) to the base plate (item 9) by tightening nut (item 8) to the base (item 9).

4. Install the mount in the application and secure the top and base plate with the mounting holes. (Only the mount for capacities 0,25t till 1t has slotted holes in the top plate). Make sure that there are no horizontal forces introduced when installing the mount in the application.

5. Remove set screw (item 10) from the mount.

6. Take the BM24R and install the rocker pin set in the load cell. Before you install the rocker pin set in the capacities from 0,25t to 1t, you have to remove the counterpart (delivered with the load cell) from the load cell first. For these capacities you install the lower house (item 5) first in the load cell. For all other capacities you check if the counterpart (delivered with the load cell) is properly installed. Now apply some high pressure grease to the top and bottom surfaces of the rocker pin (item 4) and put it in the load cell. Now you can put the upper house (item 3) on top of the rocker pin. For the 10t and 13t capacities is Item 3 already installed in the top plate of the mount.

7. Slide the load cell with rocker pin set into the mount and re-install the set screw (item 10) what will center the load cell in the mount.

8. You can start lowering the top plate (item 2) now by turning the nuts (item6) one by one half a turn down. When more mounts are installed in the same application all nuts (item 6) should be lowered simultaneously to ensure a good vertical movement of the entire application. During this process you have to make sure that the upper house (for the 10t – 13t it is the rocker pin) will slight correctly in the reception hole in the top plate.

9. The installation is now ready to use.

Specifications and dimensions are subject to change without notice and do not constitute any liability whatsoever.

Zemic Europe B.V.
Leerlooierstraat 8
4871 EN Etten-Leur
The Netherlands

T: +31 76 50 39480
F: +31 76 50 39481
info@zemic.nl
www.zemic.nl