Type BM-8-411



Short description

- Self aligning construction
- Easy load cell access
- Stainless steel
- Lift-off protection
- Can be used with Load Cell models: BM8H

Available models

Model	Capacity	Full article description	Part number
BM-8-411	0.5 – 2t	BM-8-411-0.5t/2t	2085050
	5t	BM-8-411-5t	2085052

Detailed specifications BM-8-411

Capacity	0.5t – 2t	5t
Maximum vertical force (down)	15 kN	30 kN
Maximum vertical force (up)	10 kN	20 kN
Maximum horizontal force	5 kN	10 kN
Maximum horizontal movement	+2 / -2 mm	+2 / -2 mm

Specifications and dimensions are subject to change without notice and do not constitute any liability whatsoever.

Zemic Europe B.V.
Leerlooierstraat 8
4871 EN Etten-Leur
The Netherlands

T: +31 76 50 39480
F: +31 76 50 39481
info@zemic.nl
www.zemic.nl

Type BM-8-411

Dimensions in mm

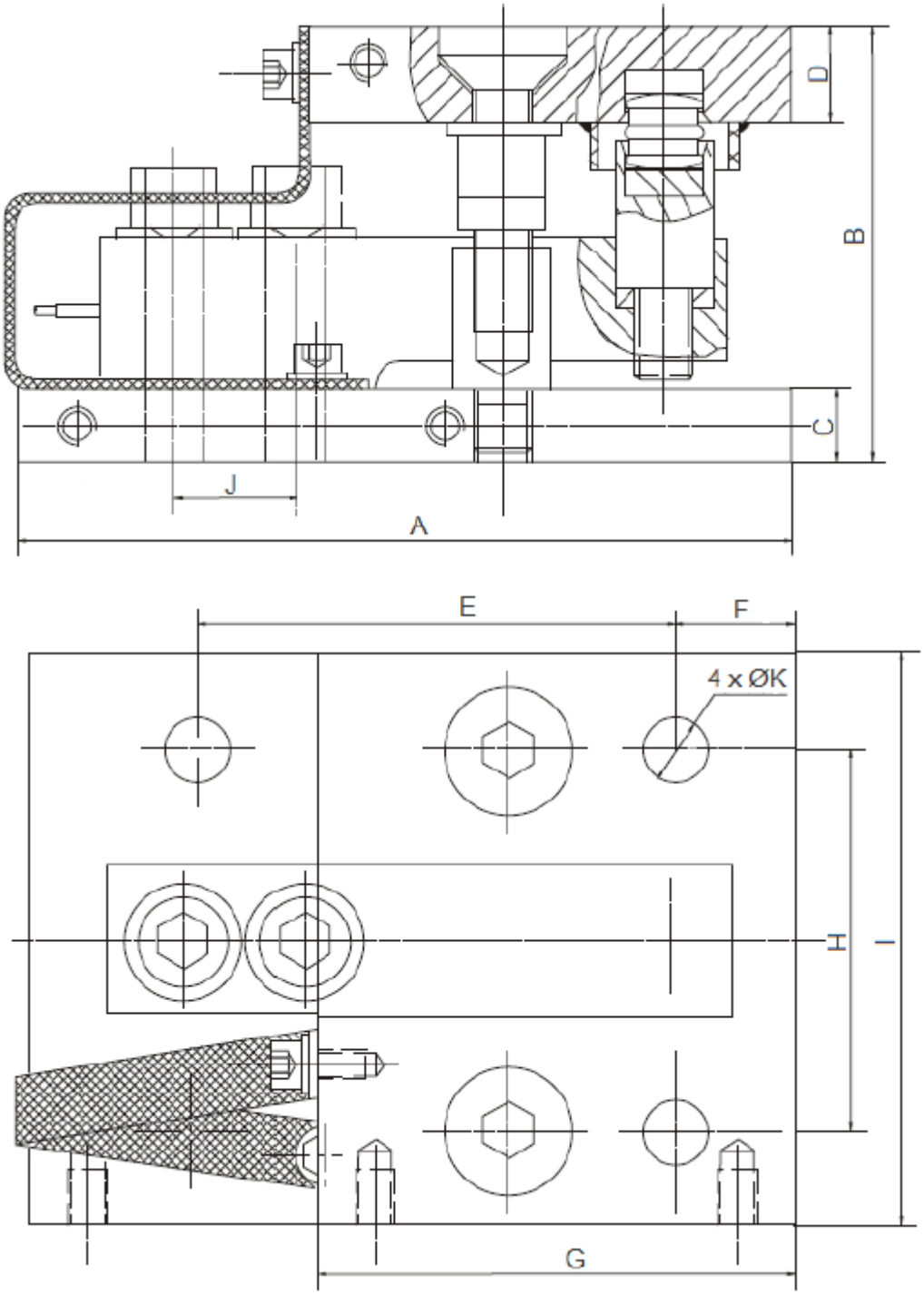

Dimension Capacity	A	B	C	D	E	F	G	H	I	J	ØK
0.5t – 2t	160	90	15	20	100	25	100	80	120	25.4	14
5t	185	125	20	20	135	25	120	100	150	38.1	18

Specifications and dimensions are subject to change without notice and do not constitute any liability whatsoever.

Zemic Europe B.V.
Leerlooierstraat 8
4871 EN Etten-Leur
The Netherlands

T: +31 76 50 39480
F: +31 76 50 39481
info@zemic.nl
www.zemic.nl