Type BM-8-412



Short description

- Self aligning construction
- Easy load cell access
- Stainless steel
- Lift-off protection
- Stabilized by rod
- Can be used with Load Cell models: BM8H

Available models

Model	Capacity	Full article description	Part number
BM-8-412	0.5 – 2t	BM-8-412-0.5t/2t	2085051
	5t	BM-8-412-5t	2085053

Detailed specifications BM-8-412

Capacity	0.5t – 2t	5t
Maximum vertical force (down)	15 kN	30 kN
Maximum vertical force (up)	10 kN	20 kN
Maximum force parallel to the stay rod	10 kN	20 kN
Maximum horizontal force	5 kN	10 kN
Maximum horizontal movement	+2 / -2 mm	+2 / -2 mm

Specifications and dimensions are subject to change without notice and do not constitute any liability whatsoever.

Zemic Europe B.V.
Leerlooierstraat 8
4871 EN Etten-Leur
The Netherlands

T: +31 76 50 39480
F: +31 76 50 39481
info@zemic.nl
www.zemic.nl

Type BM-8-412

Dimensions in mm

0.5t – 2t

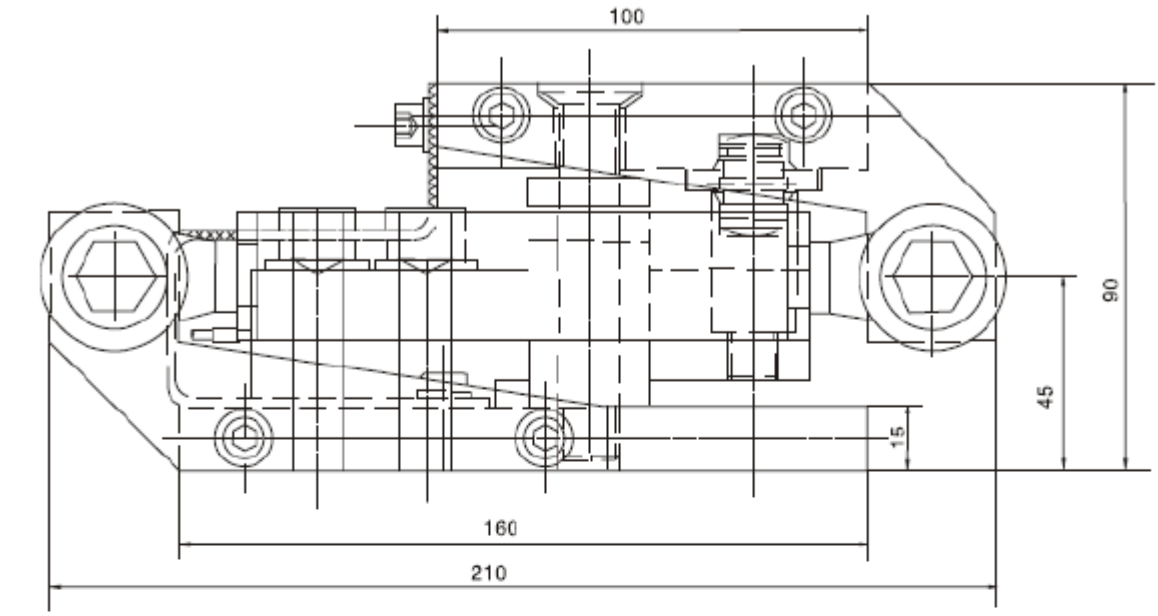

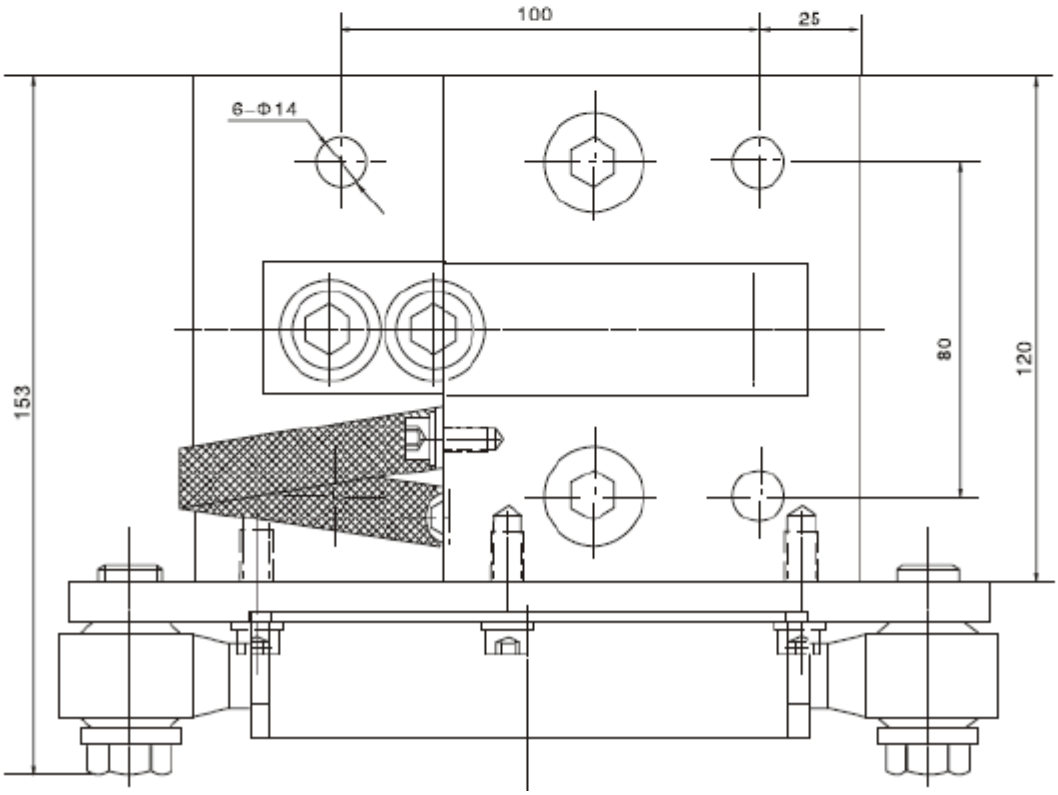

Specifications and dimensions are subject to change without notice and do not constitute any liability whatsoever.

Zemic Europe B.V.
Leerlooierstraat 8
4871 EN Etten-Leur
The Netherlands

T: +31 76 50 39480
F: +31 76 50 39481
info@zemic.nl
www.zemic.nl

Type BM-8-412

5t

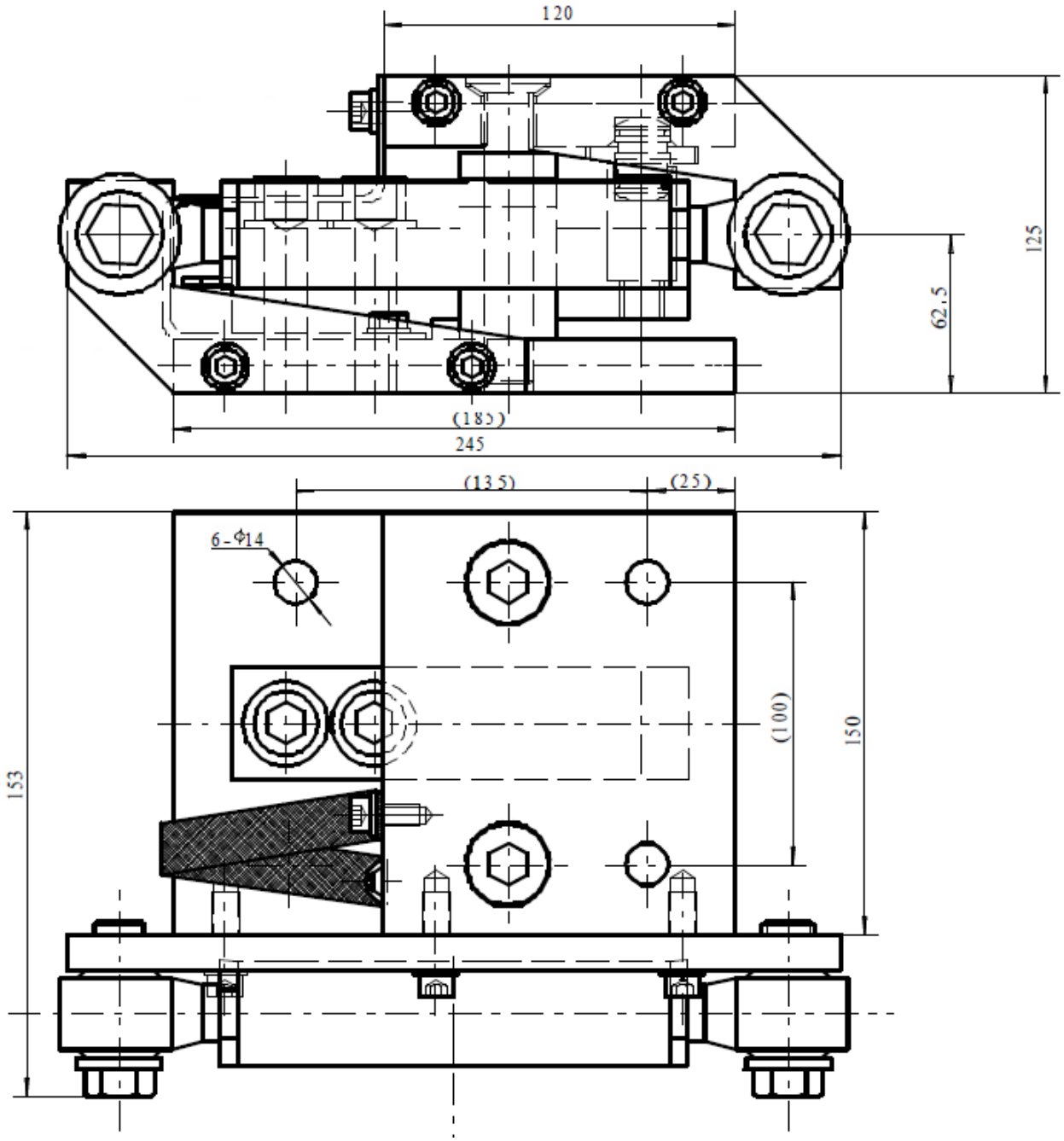

Specifications and dimensions are subject to change without notice and do not constitute any liability whatsoever.

Zemic Europe B.V.
Leerlooierstraat 8
4871 EN Etten-Leur
The Netherlands

T: +31 76 50 39480
F: +31 76 50 39481
info@zemic.nl
www.zemic.nl